Grid-forming Inverters for Scalable Microgrids

Brian Johnson
Assistant Professor
University of Washington

December 3rd, 2021

ELECTRICAL & COMPUTER ENGINEERING
UNIVERSITY of WASHINGTON

Acknowledgements

Contributions from my postdocs and grad students


Minghui


Nimesh


Rahul


Weiqian


Soham


Pranav


Trager

and generous support from DOE & NSF for my research on:

- Grid-forming systems
- Power electronics
- UNIFI Consortium

SOLAR ENERGY TECHNOLOGIES OFFICE
U.S. Department Of Energy

NSF

U.S. DEPARTMENT OF ENERGY | Energy Efficiency & Renewable Energy

Renewable Utilization for Various Grid Sizes

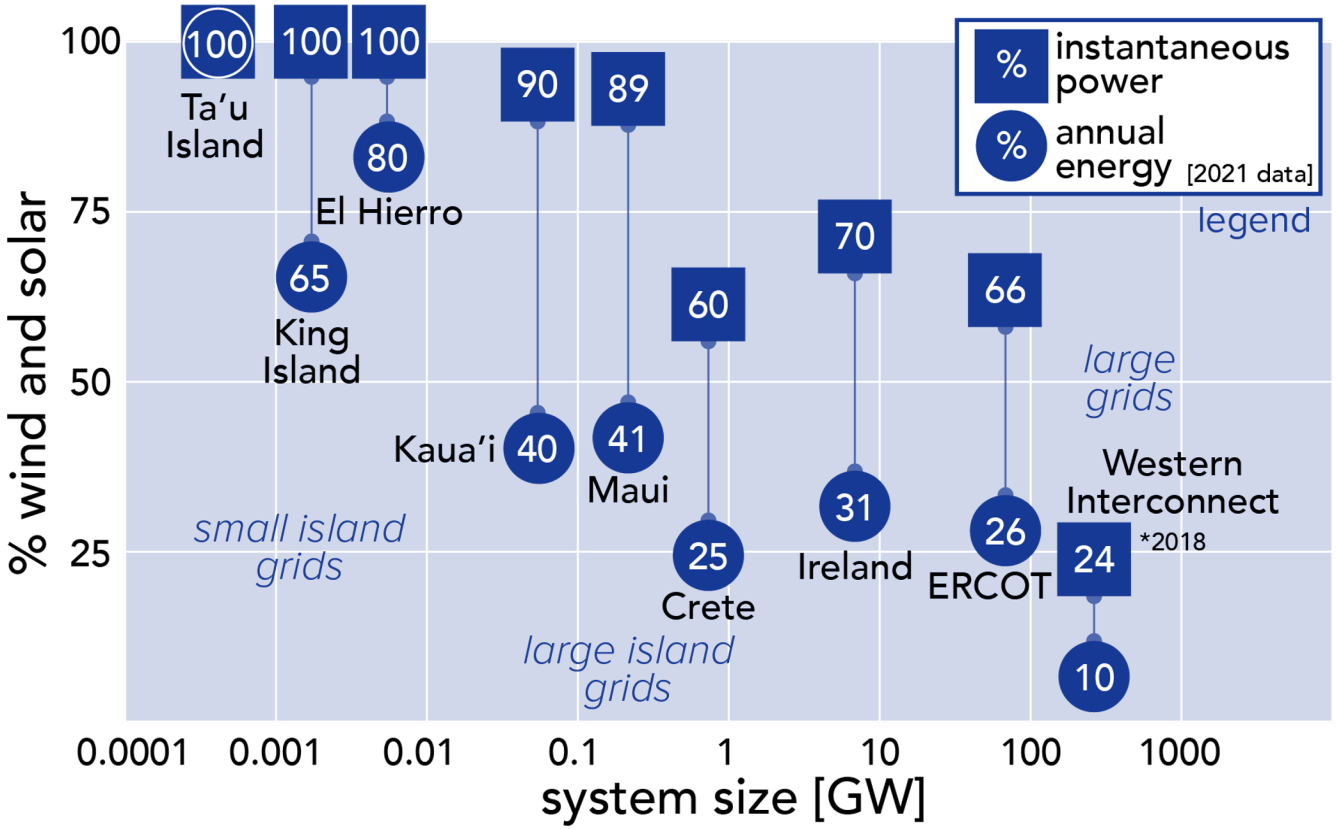

- Engineering challenges grow with system size and complexity
- Need scalable, robust, and resilient methods for system operation

A Vision for the Future Grid

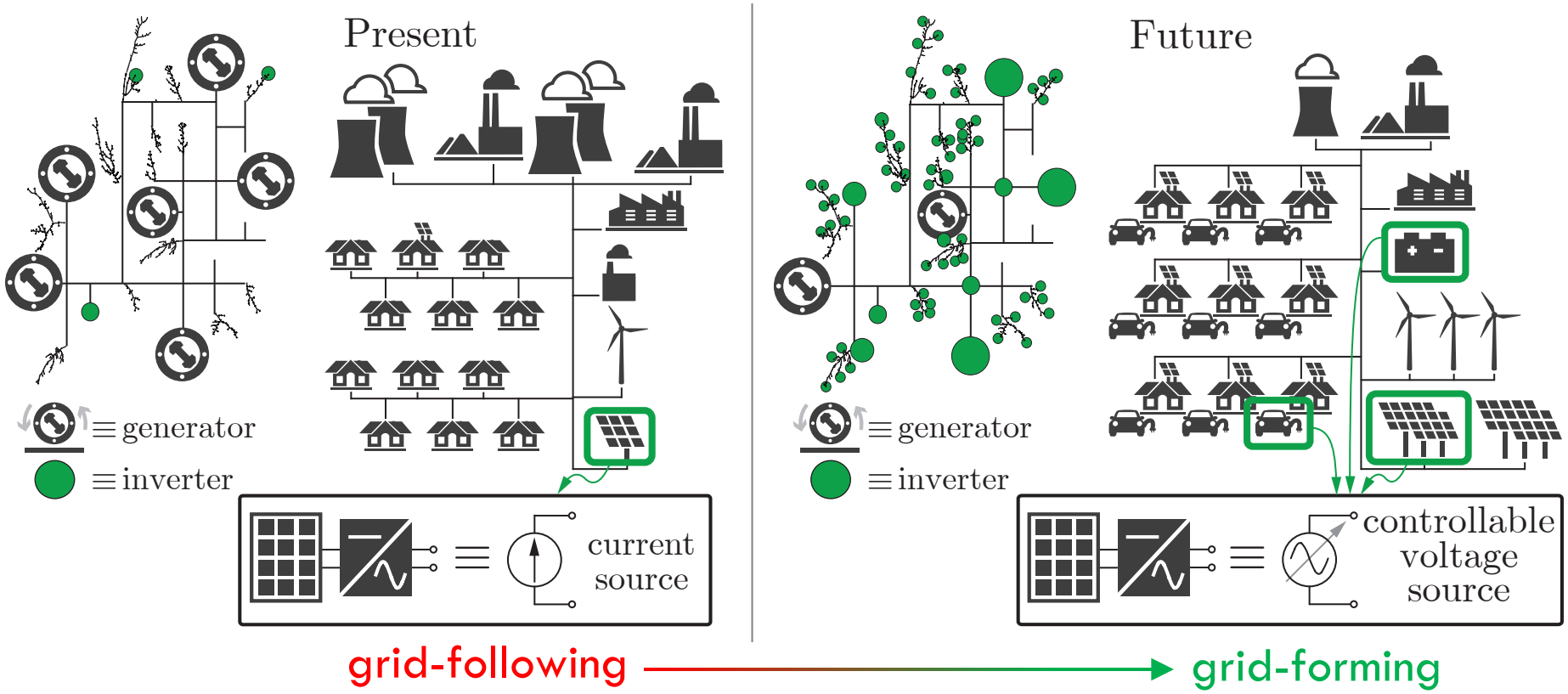

Achieving 2 goals simultaneously:

- Break down barriers that limit adoption of renewable energy
- Realize a bottom-up system that works resiliently at any scale

Desired Characteristics of a GFM Inverter

- Can operate in standalone or with many other GFMs
- Proportional power sharing among parallel units
- Works when connected to a stiff grid or weak grid
- Synchronization without a phase-locked-loop
- Accepts PQ bias signals
- Has current limiter to prevent overcurrents
- Can be integrated with dc-side controls

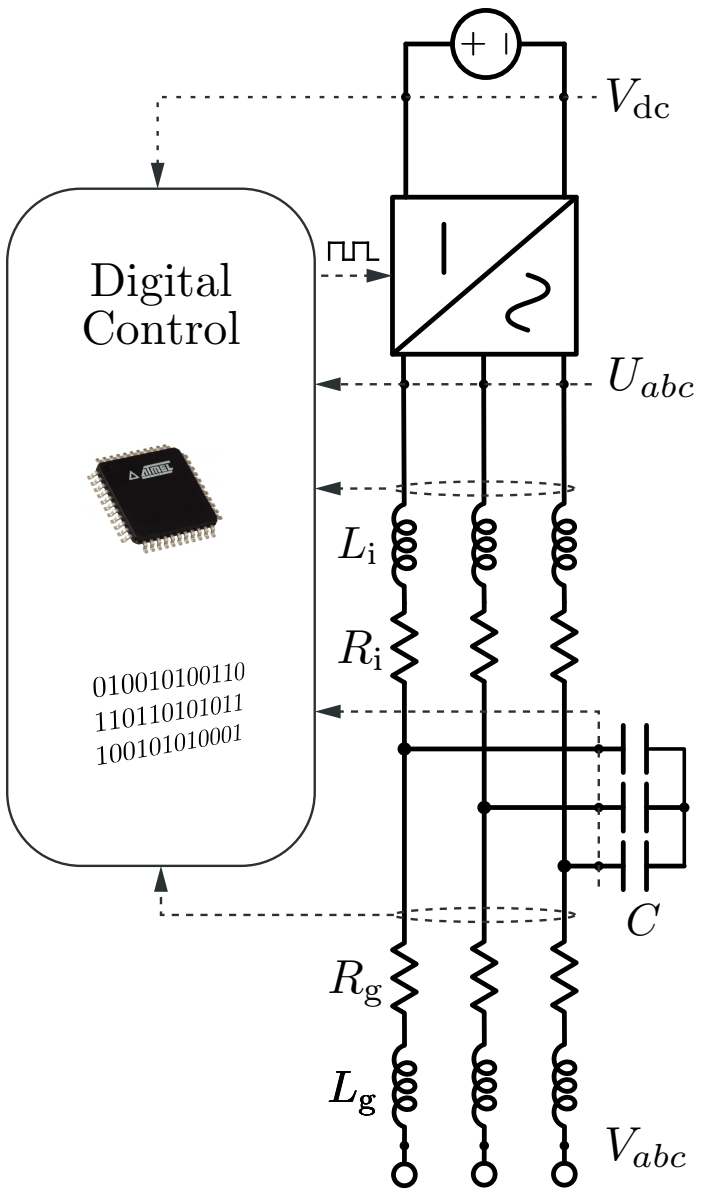

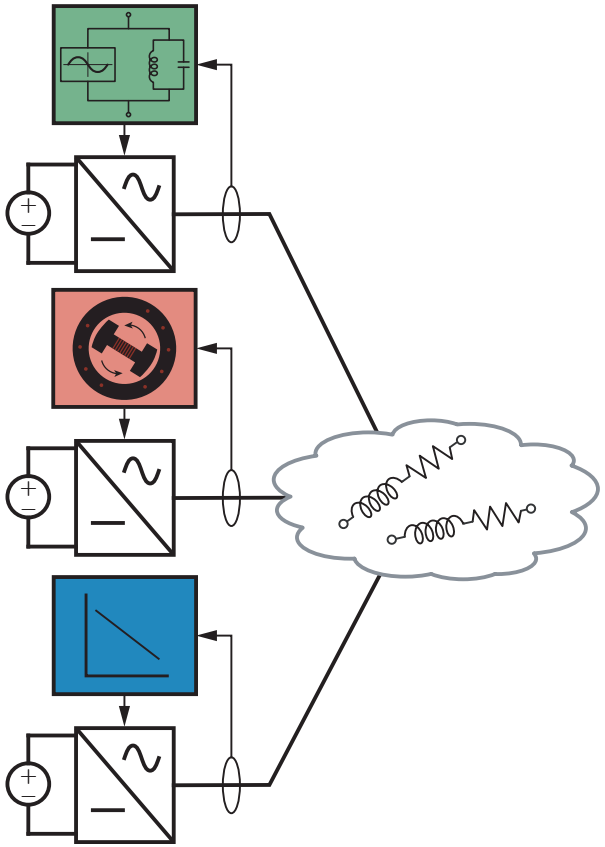

Interoperability

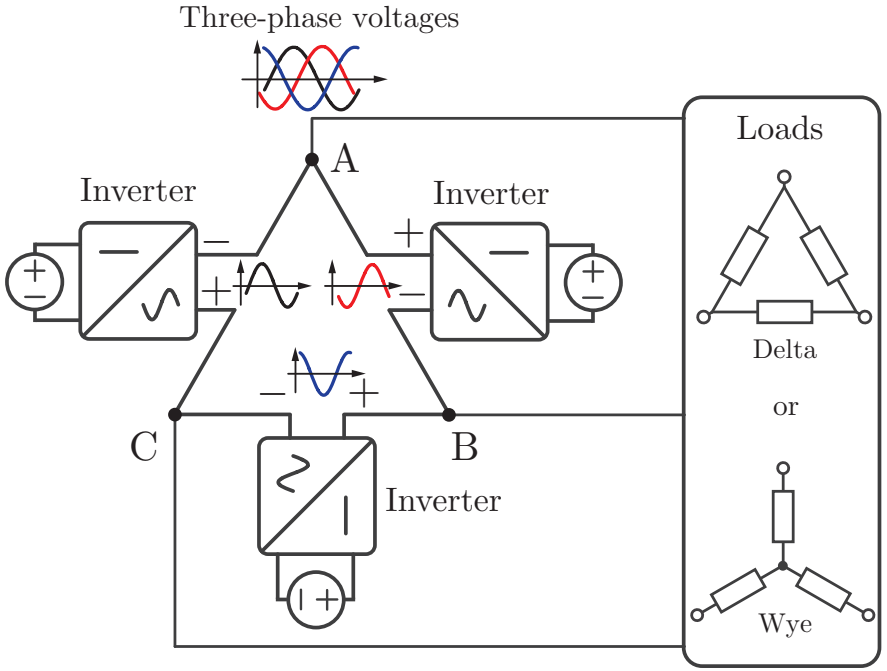

Phase Balancing

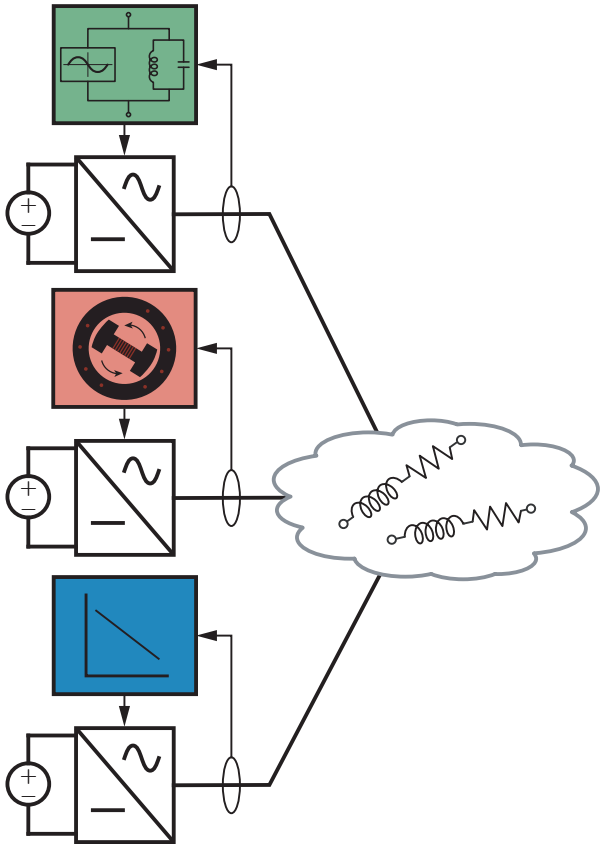

Interoperability

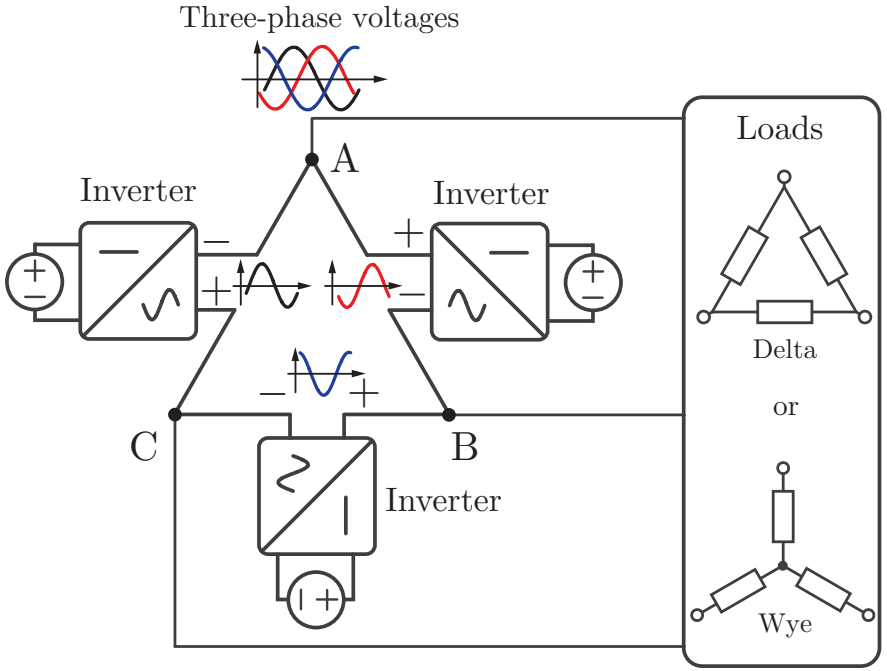

Phase Balancing

Approach #1: Dispatchable Virtual Oscillator Control

- A 2nd order nonlinear oscillator
- Newest GFM type in existence

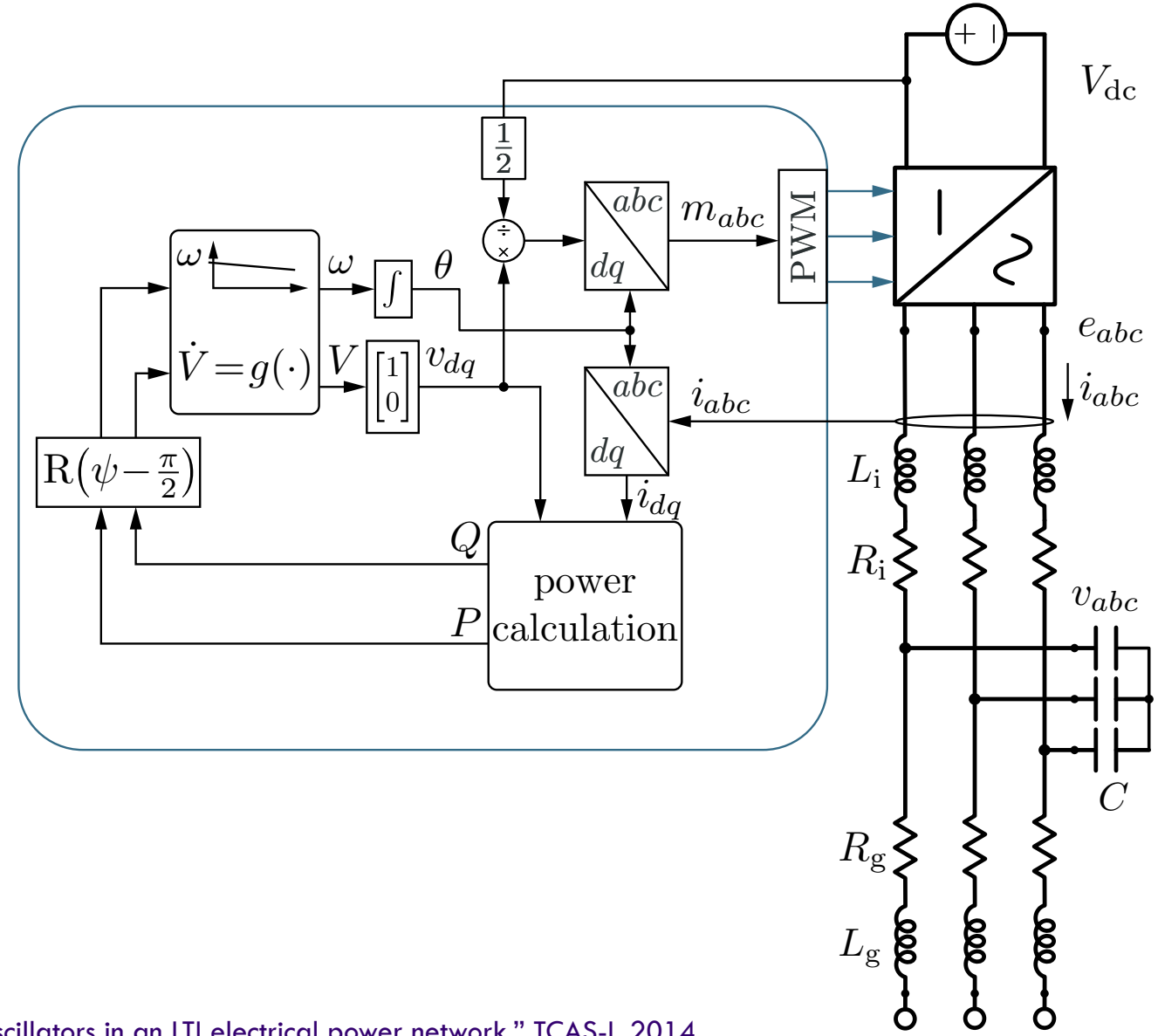

[1] Johnson, Dhople, Hamadeh, Krein, "Synchronization of nonlinear oscillators in an LTI electrical power network," TCAS-I, 2014.

[2] Colombino, Groß, Dorfler, "Global phase and voltage synchronization for power inverters: A decentralized consensus-inspired approach," CDC, 2017.

Approach #1: Dispatchable Virtual Oscillator Control

Control equations are given by

$$\omega = \omega_0 + \frac{\omega_0 \kappa_1}{V^2} \begin{bmatrix} 1 & 0 \end{bmatrix} \mathrm{R}(\psi - \tfrac{\pi}{2}) \begin{bmatrix} P^\star - P \\ Q^\star - Q \end{bmatrix},$$

$$\dot{V} = \omega_0 \kappa_2 V (V_0^2 - V^2) + \frac{\omega_0 \kappa_1}{V} \begin{bmatrix} 0 & 1 \end{bmatrix} \mathrm{R}(\psi - \tfrac{\pi}{2}) \begin{bmatrix} P^\star - P \\ Q^\star - Q \end{bmatrix}.$$

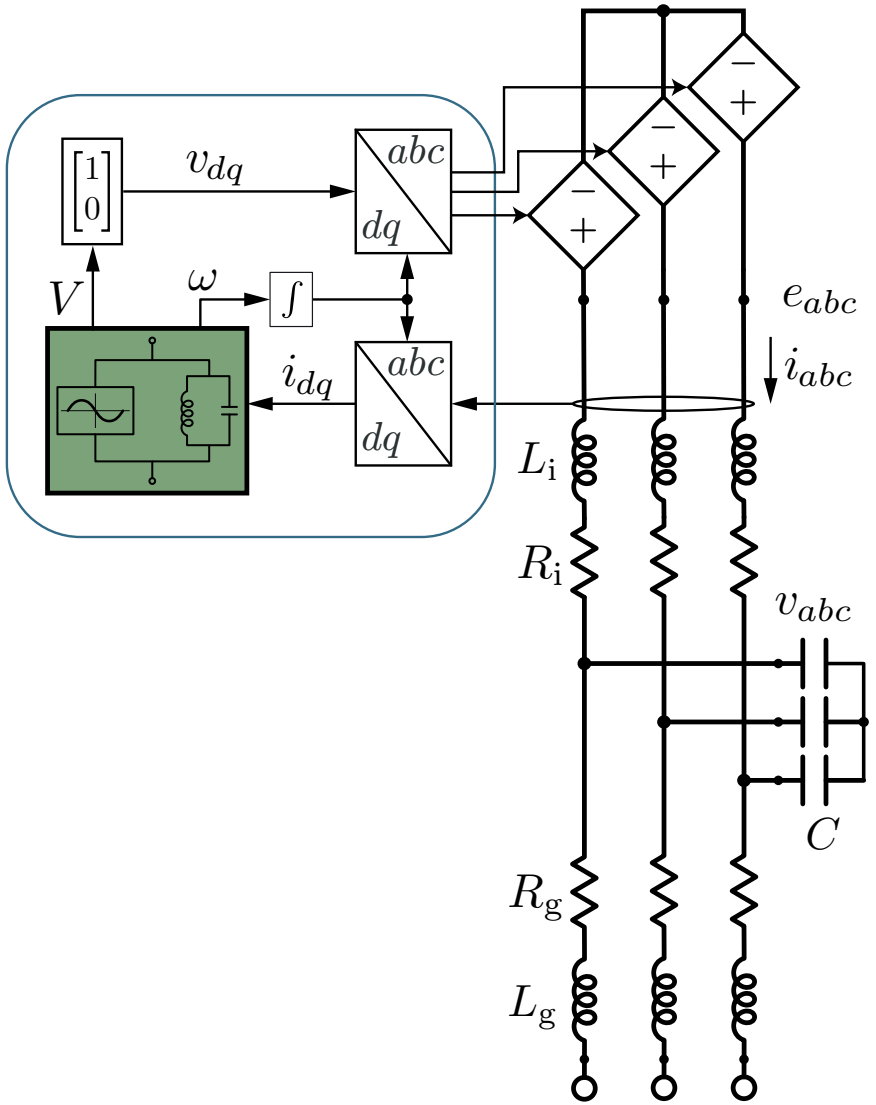

Illustrating Versatile Performance on Hardware with dVOC Control

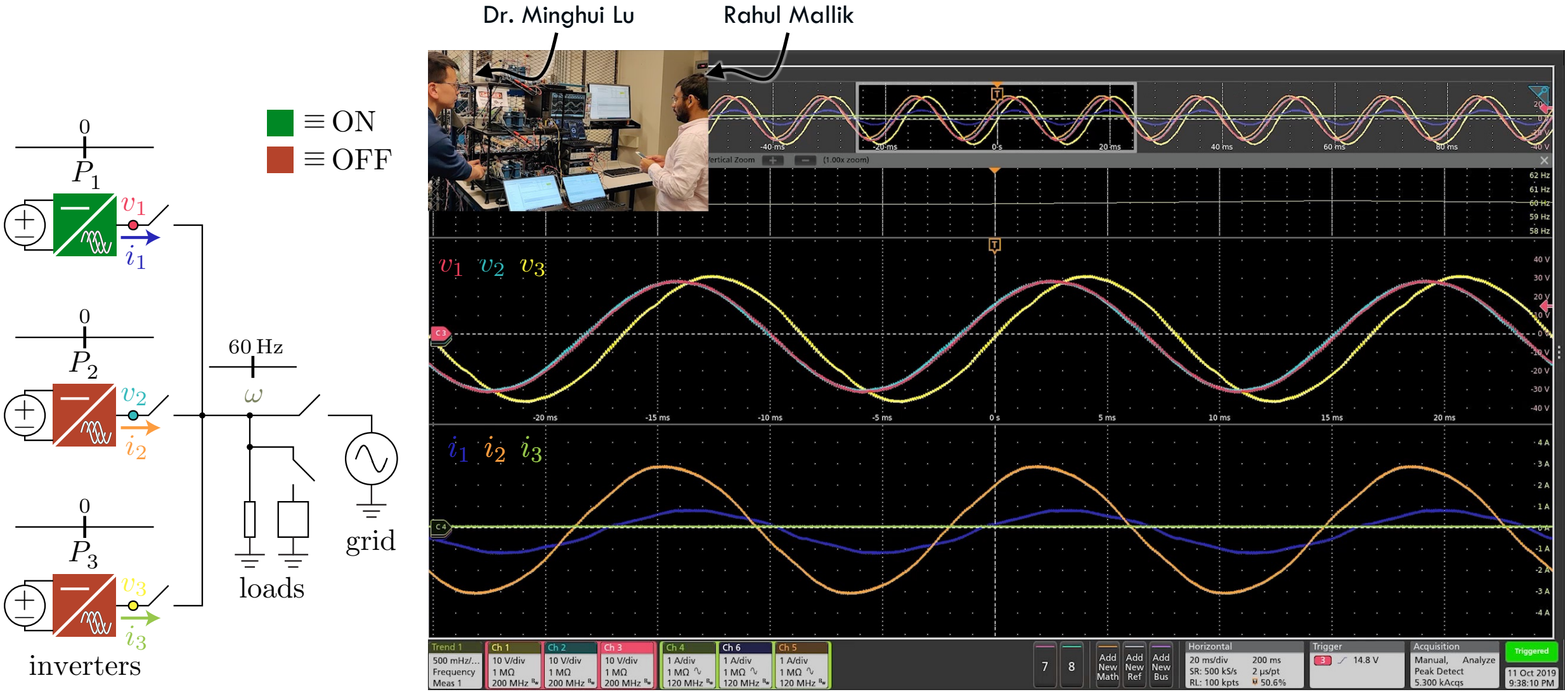

Approach #2: Droop Control

- Inspired by machine droop laws
- Oldest GFM method in existence

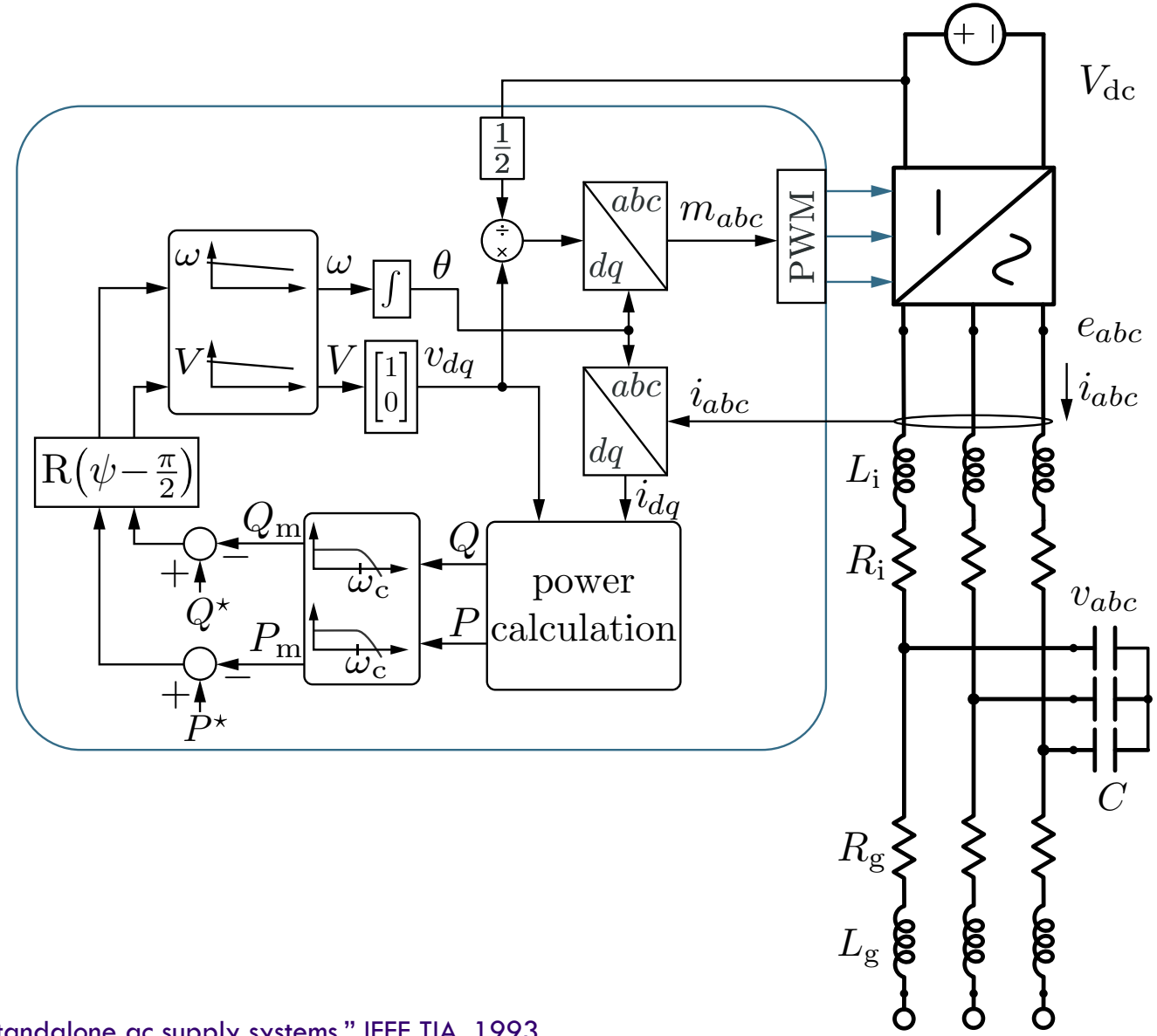

[1] M. Chandorkar, et. al, "Control of parallel connected inverters in standalone ac supply systems," IEEE TIA, 1993

[2] J. Guerrero, et. al, "Hierarchical control of droop-controlled dc and ac microgrids," IEEE TIE, 2011.

Approach #2: Droop Control

Control equations are given by

$$\omega = \omega_0 + \frac{1}{d_\mathrm{f}} \begin{bmatrix} 1 & 0 \end{bmatrix} \mathrm{R}(\psi - \tfrac{\pi}{2}) \begin{bmatrix} P^\star - P_\mathrm{m} \\ Q^\star - Q_\mathrm{m} \end{bmatrix},$$

$$V = V_0 + \frac{1}{d_\mathrm{v}} \begin{bmatrix} 1 & 0 \end{bmatrix} \mathrm{R}(\psi - \tfrac{\pi}{2}) \begin{bmatrix} P^\star - P_\mathrm{m} \\ Q^\star - Q_\mathrm{m} \end{bmatrix},$$

$$\frac{1}{\omega_\mathrm{c}} \begin{bmatrix} \dot{P}_\mathrm{m} \\ \dot{Q}_\mathrm{m} \end{bmatrix} = - \begin{bmatrix} P_\mathrm{m} \\ Q_\mathrm{m} \end{bmatrix} + \begin{bmatrix} P \\ Q \end{bmatrix}.$$

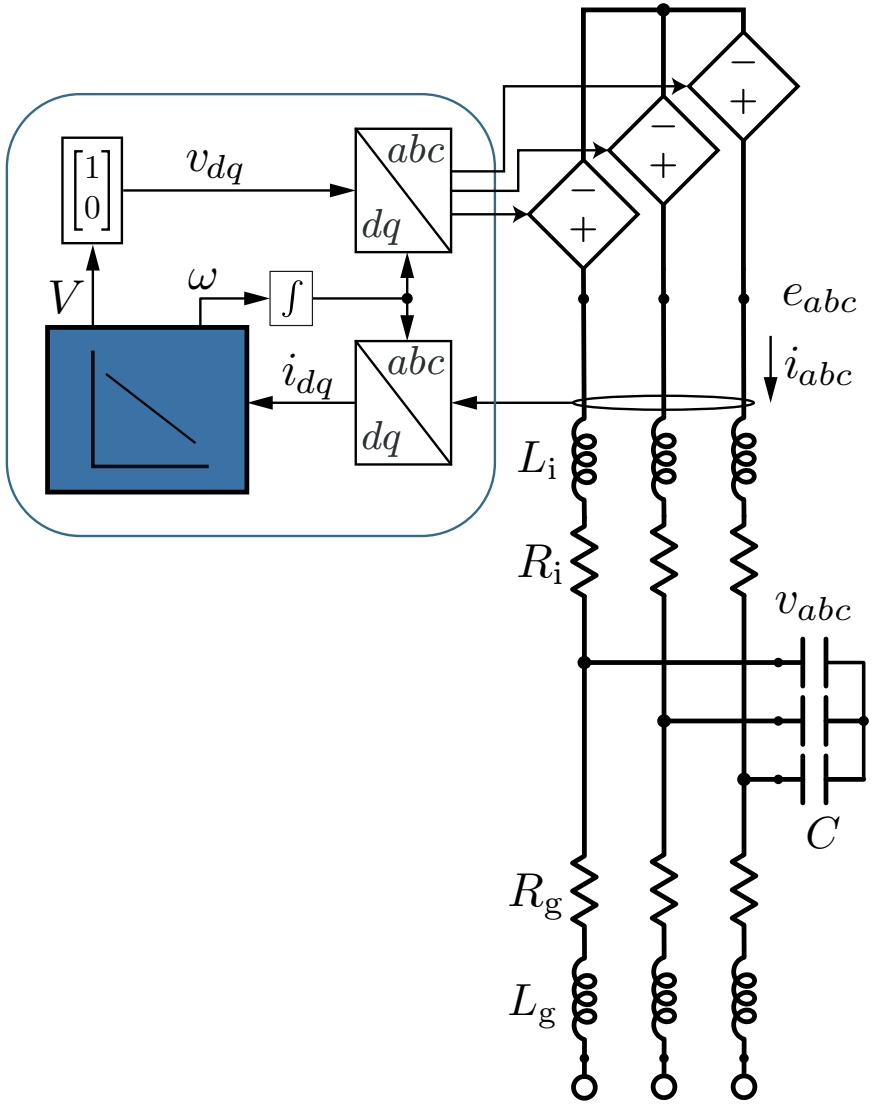

Approach #3: Virtual Synchronous Machine Control

- Emulate machine dynamics digitally
- Popular due to familiar behavior

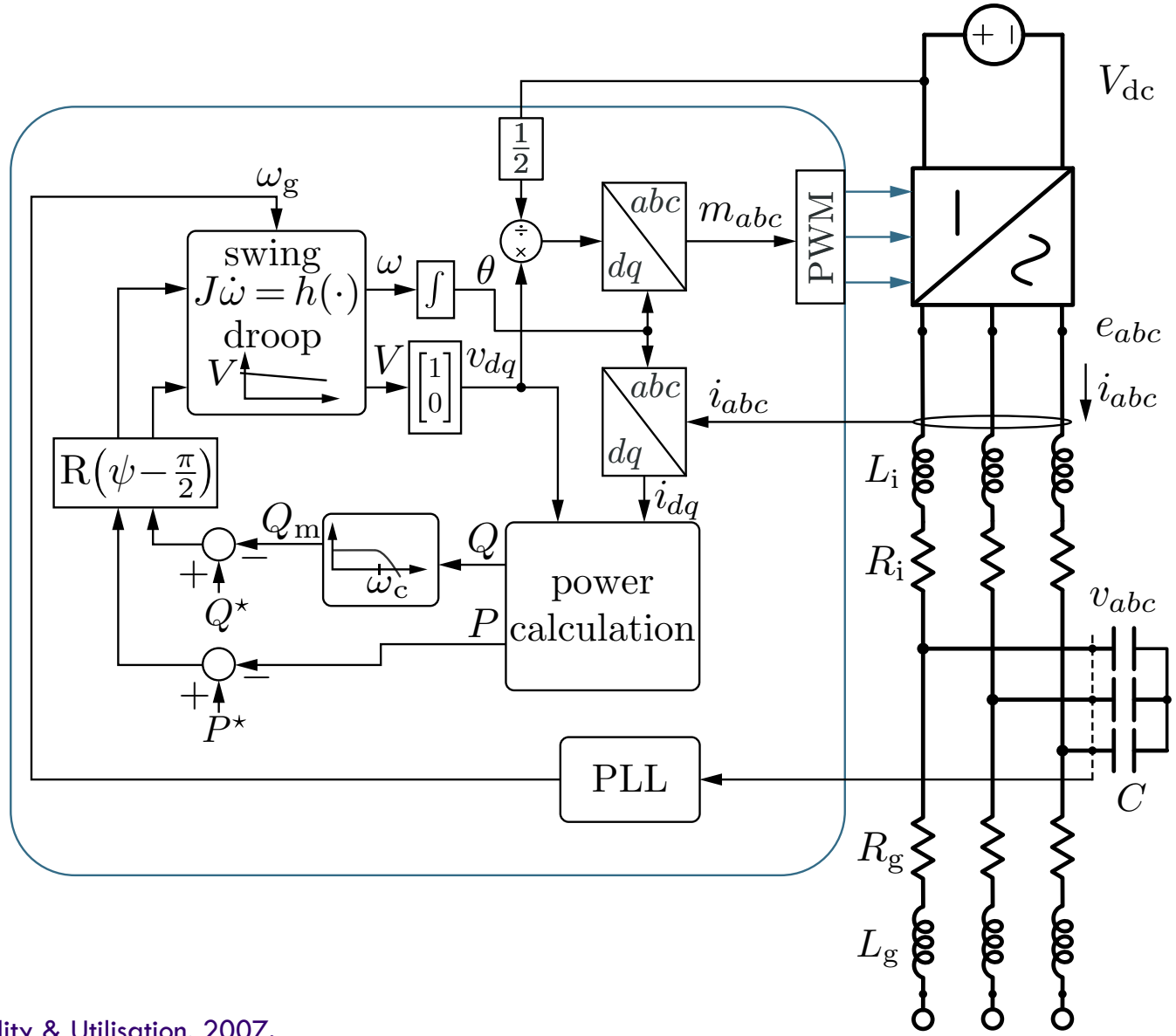

[1] Beck, Hesse, "Virtual synchronous machine," Electrical Power Quality & Utilisation, 2007.

[2] D'Arco, Suul, Fosso, "A virtual synchronous machine implementation for distributed control of power converters in smartgrids," EPSR, 2014.

Approach #3: Virtual Synchronous Machine Control

Control equations are given by

$$J\dot{\omega} = -\omega + \omega_0 + \frac{d_\mathrm{d}}{d_\mathrm{f}}(\omega_\mathrm{g} - \omega)$$

$$+ \frac{1}{d_\mathrm{f}}\begin{bmatrix}1 & 0\end{bmatrix}\mathrm{R}(\psi - \tfrac{\pi}{2})\begin{bmatrix}P^\star - P \\ Q^\star - Q_\mathrm{m}\end{bmatrix},$$

$$V = V_0 + \frac{1}{d_\mathrm{v}}\begin{bmatrix}0 & 1\end{bmatrix}\mathrm{R}(\psi - \tfrac{\pi}{2})\begin{bmatrix}P^\star - P \\ Q^\star - Q_\mathrm{m}\end{bmatrix},$$

$$\frac{1}{\omega_0}\dot{\eta} = \begin{bmatrix}0 & 1\end{bmatrix}\mathrm{R}(\alpha)\mathrm{R}(\delta)\mathrm{T}(\omega_0 t)v,$$

$$\frac{1}{\omega_0}\dot{\alpha} = \frac{k_\mathrm{P}}{\omega_0}\dot{\eta} + k_\mathrm{I}\eta,$$

$$\frac{1}{\omega_\mathrm{c}}\dot{Q}_\mathrm{m} = -Q_\mathrm{m} + Q\ .$$

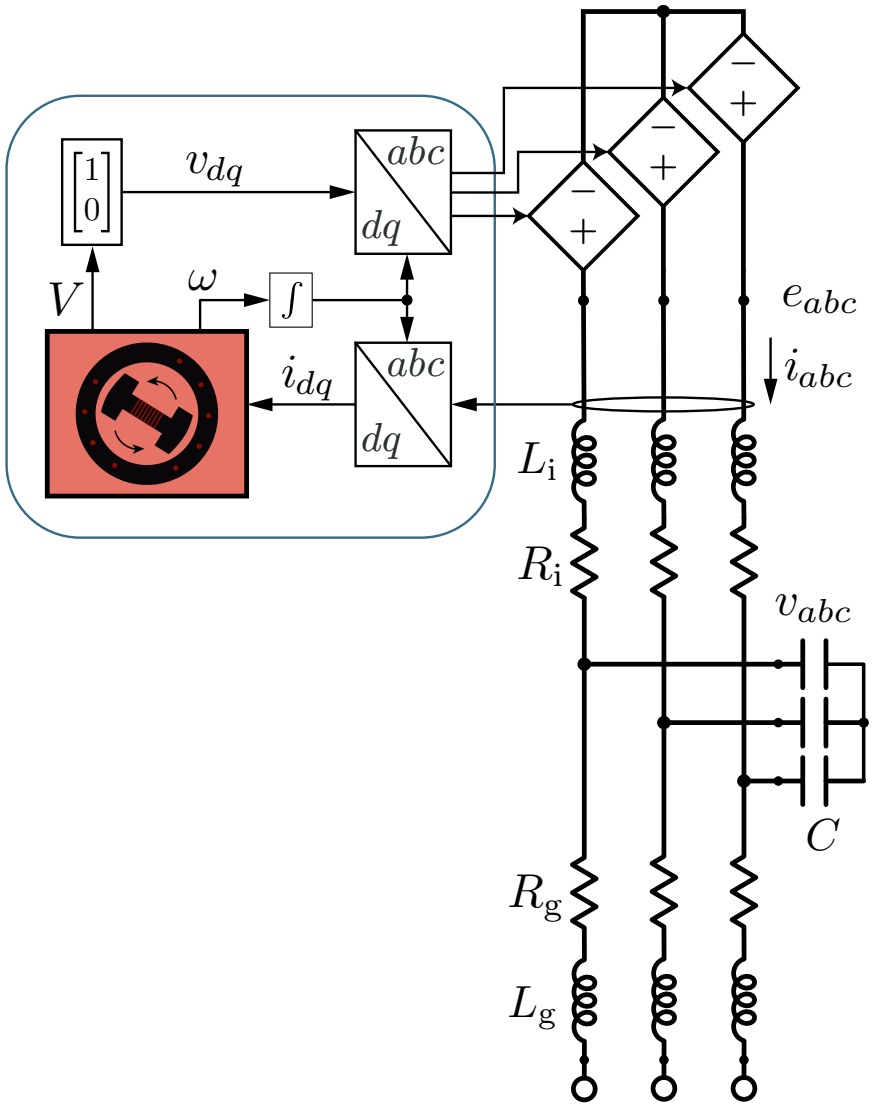

A Universal & Unified GFM Model

All 3 GFM types can be boiled down to

$$\tau_{\mathrm{f}} \frac{\mathrm{d}\omega}{\mathrm{d}t} = -\omega + \omega_0 + \kappa_{\mathrm{d}}\left(\omega_{\mathrm{g}} - \omega\right) + \kappa_{\mathrm{f}} \begin{bmatrix} 1 & 0 \end{bmatrix} \mathrm{R}(\psi - \tfrac{\pi}{2}) \begin{bmatrix} P^\star - P_{\mathrm{m}} \\ Q^\star - Q_{\mathrm{m}} \end{bmatrix},$$

$$\tau_{\mathrm{v}} \frac{\mathrm{d}V}{\mathrm{d}t} = f_{\mathrm{v}}(V) + \kappa_{\mathrm{v}} \begin{bmatrix} 0 & 1 \end{bmatrix} \mathrm{R}(\psi - \tfrac{\pi}{2}) \begin{bmatrix} p^\star - p_{\mathrm{m}} \\ q^\star - q_{\mathrm{m}} \end{bmatrix},$$

$$\frac{1}{\omega_0} \frac{\mathrm{d}\eta}{\mathrm{d}t} = \begin{bmatrix} 0 & 1 \end{bmatrix} \mathrm{R}(\alpha)\mathrm{R}(\delta)\mathrm{T}(\omega_0 t) v,$$

$$\frac{1}{\omega_0} \frac{\mathrm{d}\alpha}{\mathrm{d}t} = \frac{k_{\mathrm{P}}}{\omega_0} \dot{\eta} + k_{\mathrm{I}} \eta,$$

$$\tau_{\mathrm{p}} \begin{bmatrix} \dot{P}_{\mathrm{m}} \\ \dot{Q}_{\mathrm{m}} \end{bmatrix} = - \begin{bmatrix} P_{\mathrm{m}} \\ Q_{\mathrm{m}} \end{bmatrix} + \begin{bmatrix} P \\ Q \end{bmatrix} .$$

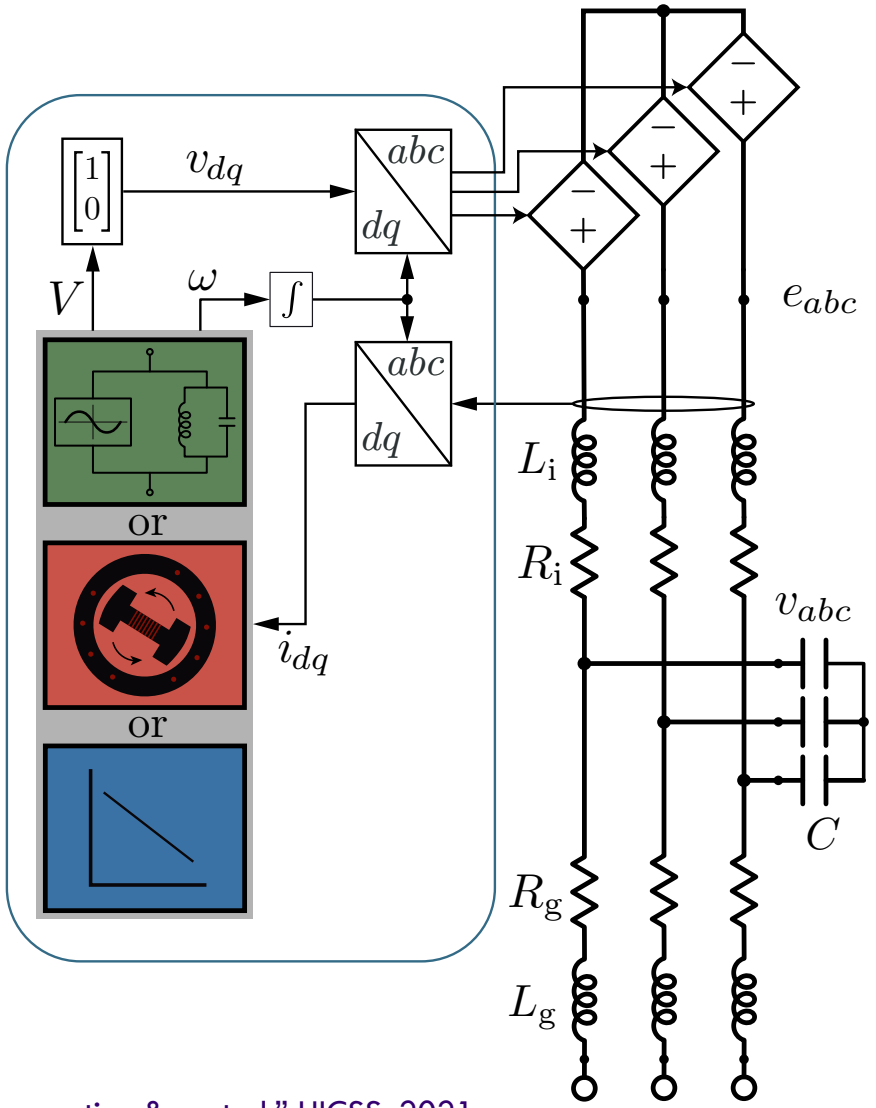

[1] Johnson, et. al, "A generic primary-control model for grid-forming inverters: Towards interoperable operation & control," HICSS, 2021.

[2] Ajala, Baeckeland, Dhople, Dominguez-Garcia, "Uncovering the Kuramoto model from full-order models of grid-forming inverter-based power networks," CDC, 2021.

A Universal & Unified GFM Model

All 3 GFM types can be boiled down to

$$\tau_{\mathrm{f}}\frac{\mathrm{d}\omega}{\mathrm{d}t} = -\omega + \omega_0 + \kappa_{\mathrm{d}}\left(\omega_{\mathrm{g}} - \omega\right) + \kappa_{\mathrm{f}}\begin{bmatrix}1 & 0\end{bmatrix}\mathrm{R}(\psi - \tfrac{\pi}{2})\begin{bmatrix}P^\star - P_{\mathrm{m}}\\ Q^\star - Q_{\mathrm{m}}\end{bmatrix},$$

$$\tau_{\mathrm{v}}\frac{\mathrm{d}V}{\mathrm{d}t} = f_{\mathrm{v}}(V) + \kappa_{\mathrm{v}}\begin{bmatrix}0 & 1\end{bmatrix}\mathrm{R}(\psi - \tfrac{\pi}{2})\begin{bmatrix}p^\star - p_{\mathrm{m}}\\ q^\star - q_{\mathrm{m}}\end{bmatrix},$$

$$\frac{1}{\omega_0}\frac{\mathrm{d}\eta}{\mathrm{d}t} = \begin{bmatrix}0 & 1\end{bmatrix}\mathrm{R}(\alpha)\mathrm{R}(\delta)\mathrm{T}(\omega_0 t)v,$$

$$\frac{1}{\omega_0}\frac{\mathrm{d}\alpha}{\mathrm{d}t} = \frac{k_{\mathrm{P}}}{\omega_0}\dot{\eta} + k_{\mathrm{I}}\eta,$$

$$\tau_{\mathrm{p}}\begin{bmatrix}\dot{P}_{\mathrm{m}}\\ \dot{Q}_{\mathrm{m}}\end{bmatrix} = -\begin{bmatrix}P_{\mathrm{m}}\\ Q_{\mathrm{m}}\end{bmatrix} + \begin{bmatrix}P\\ Q\end{bmatrix}.$$

where the parameters are

	τ_{f}	τ_{v}	τ_{p}	κ_{d}	κ_{f}	κ_{v}	$f_{\mathrm{v}}(e^\star)$
droop	0	0	$\frac{1}{\omega_{\mathrm{c}}}$	0	$\frac{1}{d_{\mathrm{f}}}$	$\frac{1}{d_{\mathrm{v}}}$	$-V + V_0$
VSM	J	0	$\frac{1}{\omega_{\mathrm{c}}}$	$\frac{d_{\mathrm{d}}}{d_{\mathrm{f}}}$	$\frac{1}{d_{\mathrm{f}}}$	$\frac{1}{d_{\mathrm{v}}}$	$-V + V_0$
dVOC	0	$\frac{1}{\omega_0}$	0	0	$\frac{\omega_0\kappa_1}{V^2}$	$\frac{\kappa_1}{V}$	$\kappa_2(-V^2 + V_0^2)V$

[1] Johnson, et. al, "A generic primary-control model for grid-forming inverters: Towards interoperable operation & control," HICSS, 2021.

[2] Ajala, Baeckeland, Dhople, Dominguez-Garcia, "Uncovering the Kuramoto model from full-order models of grid-forming inverter-based power networks," CDC, 2021.

Unifying 25+ Years of GFM Technologies

1993

Control of Parallel Connected Inverters in Standalone ac Supply Systems

Mukul C. Chandorkar, *Student Member, IEEE*, Deepakraj M. Divan, *Member, IEEE*, and Rambabu Adapa, *Senior Member, IEEE*

***Abstract*—A scheme for controlling parallel-connected inverters in a standalone ac supply system is presented in this paper. This scheme is suitable for control of inverters in distributed source environments such as in isolated ac systems, large and**

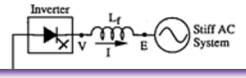

2014

Synchronization of Parallel Single-Phase Inverters With Virtual Oscillator Control

Brian B. Johnson, *Member, IEEE*, Sairaj V. Dhople, *Member, IEEE*, Abdullah O. Hamadeh, and Philip T. Krein, *Fellow, IEEE*

***Abstract*—A method to synchronize and control a system of parallel single-phase inverters without communication is presented. Inspired by the phenomenon of synchronization in networks of coupled oscillators, we propose that each inverter be controlled**

proportion to their ratings. Focused on these challenges, this paper presents a method to synchronize and control a system of parallel single-phase inverters without communication. It is important to clarify that synchronization in our setting corre

2007

Virtual Synchronous Machine

Prof. Dr.-Ing. Hans-Peter Beck
Clausthal University of Technology
Institute of Electric Power Technology (IEE)
Clausthal-Zellerfeld, Germany
info@iee.tu-clausthal.de

Dipl.-Ing. Ralf Hesse
Clausthal University of Technology
Institute of Electric Power Technology (IEE
Clausthal-Zellerfeld, Germany
ralf.hesse@tu-clausthal.de

Demands in the area of electrical energy generation and distribution, as a result of energy policies, are leading to far reaching changes in the structure of the energy supply, which is

cause or promote the appearance and mitigation of various disturbances.

$$\tau_{\mathrm{f}}\frac{\mathrm{d}\omega}{\mathrm{d}t} = -\omega + \omega_0 + \kappa_{\mathrm{d}}\left(\omega_{\mathrm{g}} - \omega\right) + \kappa_{\mathrm{f}}\begin{bmatrix}1 & 0\end{bmatrix}\mathrm{R}(\psi - \tfrac{\pi}{2})\begin{bmatrix}P^\star - P_{\mathrm{m}}\\ Q^\star - Q_{\mathrm{m}}\end{bmatrix},$$

$$\tau_{\mathrm{v}}\frac{\mathrm{d}V}{\mathrm{d}t} = f_{\mathrm{v}}(V) + \kappa_{\mathrm{v}}\begin{bmatrix}0 & 1\end{bmatrix}\mathrm{R}(\psi - \tfrac{\pi}{2})\begin{bmatrix}p^\star - p_{\mathrm{m}}\\ q^\star - q_{\mathrm{m}}\end{bmatrix},$$

$$\frac{1}{\omega_0}\frac{\mathrm{d}\eta}{\mathrm{d}t} = \begin{bmatrix}0 & 1\end{bmatrix}\mathrm{R}(\alpha)\mathrm{R}(\delta)\mathrm{T}(\omega_0 t)v,$$

$$\frac{1}{\omega_0}\frac{\mathrm{d}\alpha}{\mathrm{d}t} = \frac{k_{\mathrm{P}}}{\omega_0}\dot{\eta} + k_{\mathrm{I}}\eta,$$

$$\tau_{\mathrm{p}}\begin{bmatrix}\dot{P}_{\mathrm{m}}\\ \dot{Q}_{\mathrm{m}}\end{bmatrix} = -\begin{bmatrix}P_{\mathrm{m}}\\ Q_{\mathrm{m}}\end{bmatrix} + \begin{bmatrix}P\\ Q\end{bmatrix},$$

A unified model

Showing Interoperability with a Mix of Control Types

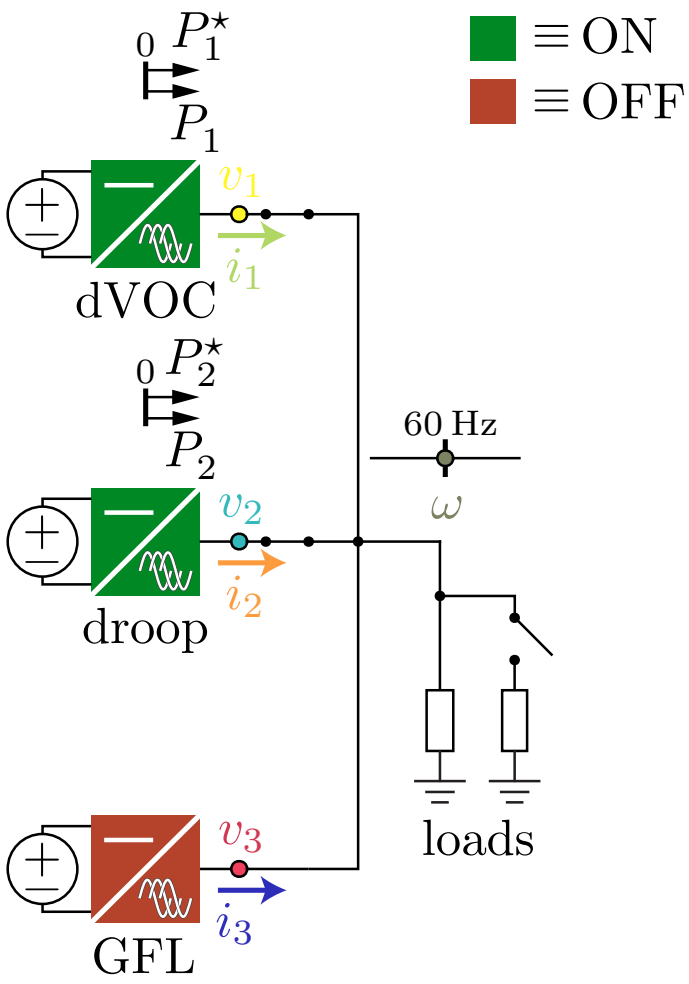

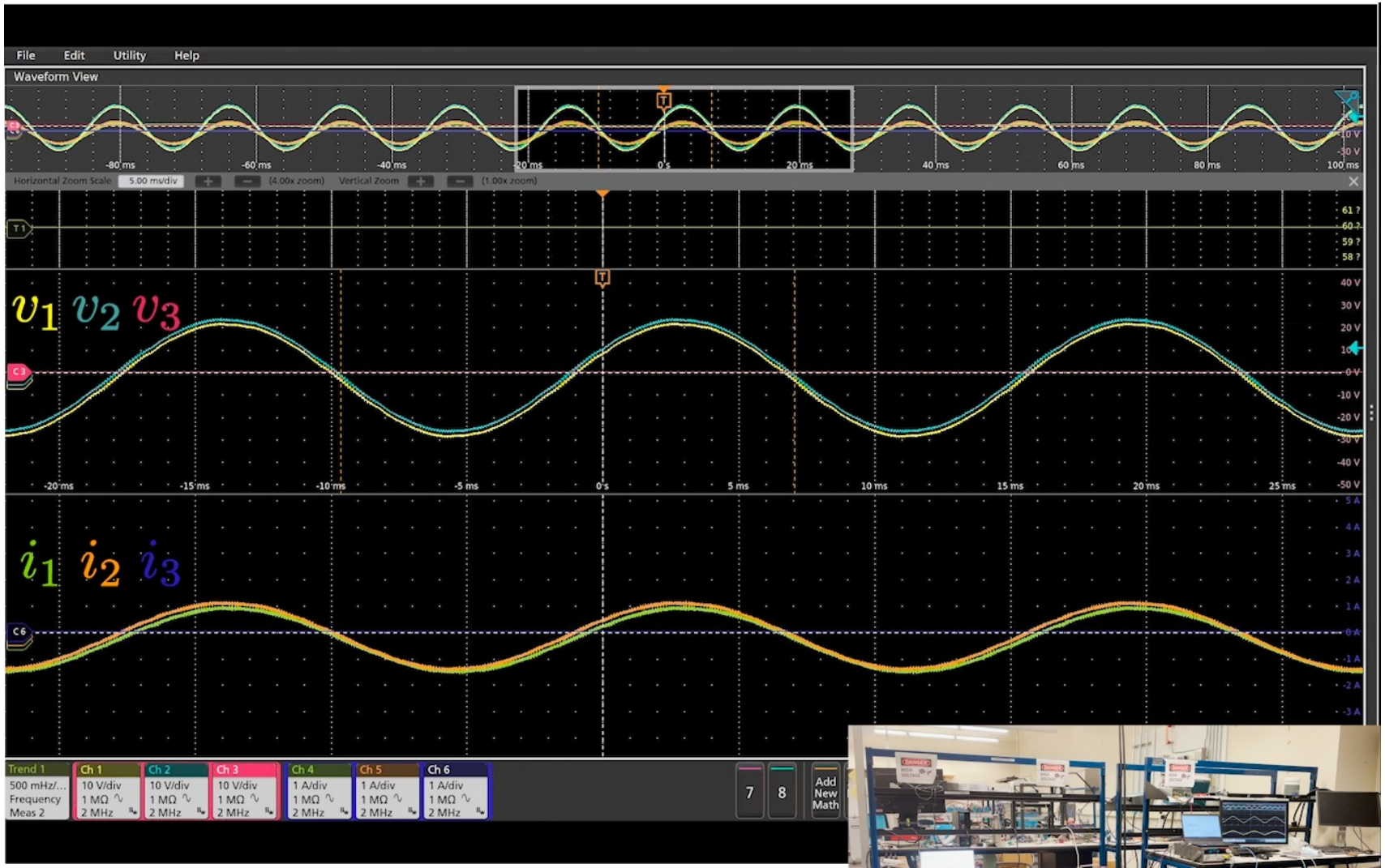

Weiqian Cai

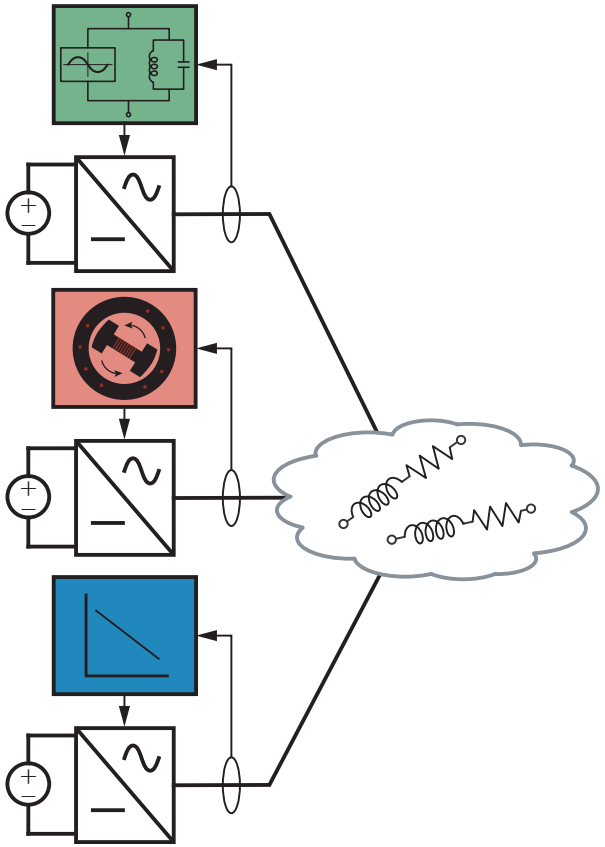

Interoperability

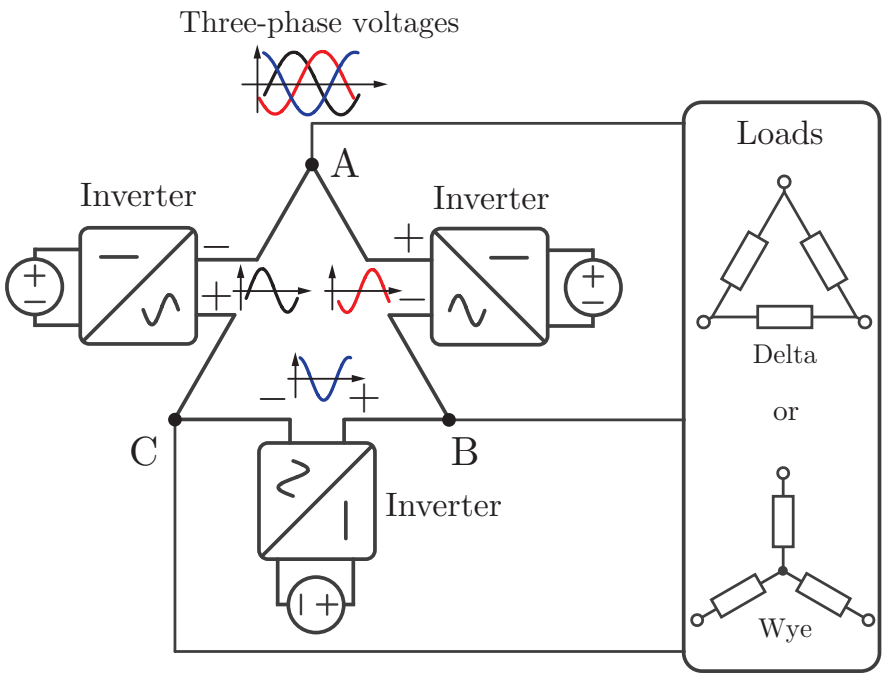

Phase Balancing

A Single-phase GFM Commercial Product

Features of the inverter building block

- 300 VA single-phase with droop-based GFM controls
- Bidirectional converter can interface PV or batteries

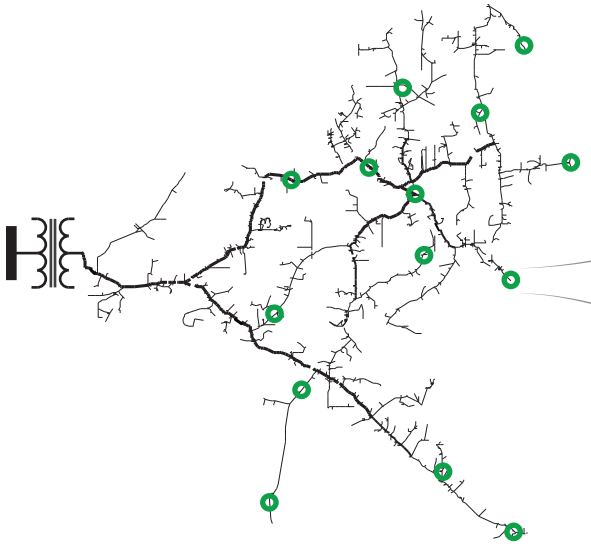

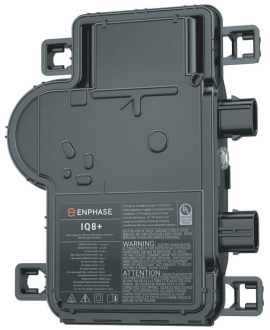

IQ8+ inverter

Over 39M+ Enphase inverters shipped for 12 GW of capacity as of September 2021

Building Three-phase Systems with Single-phase GFM Units

Can swarms of decentralized single-phase GFMs self-organize into a three-phase system?

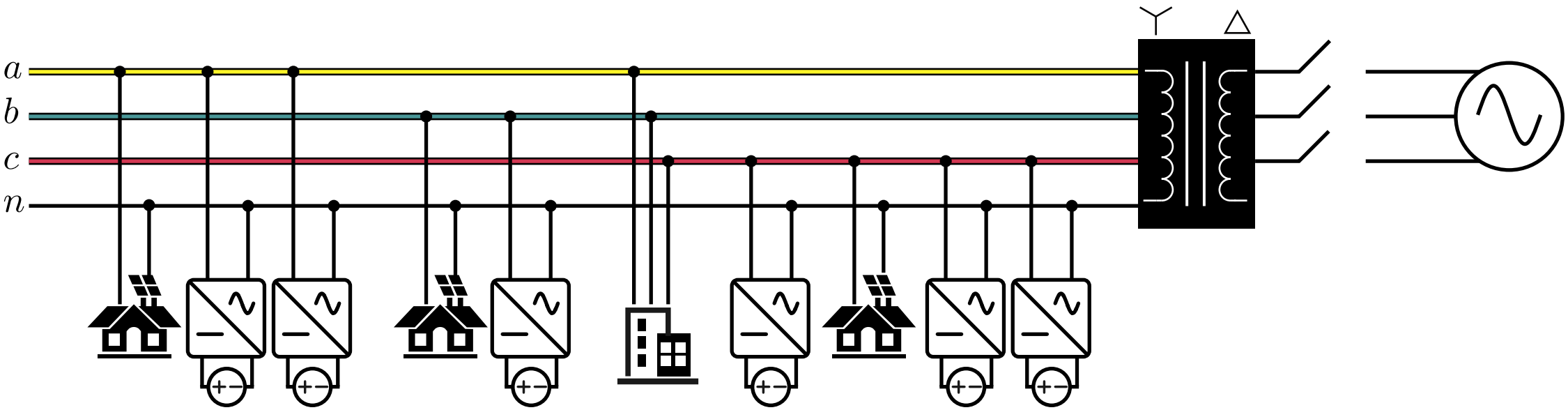

Could this system maintain phase balancing when islanded?

Self-balancing Single-phase GFM Hardware Results

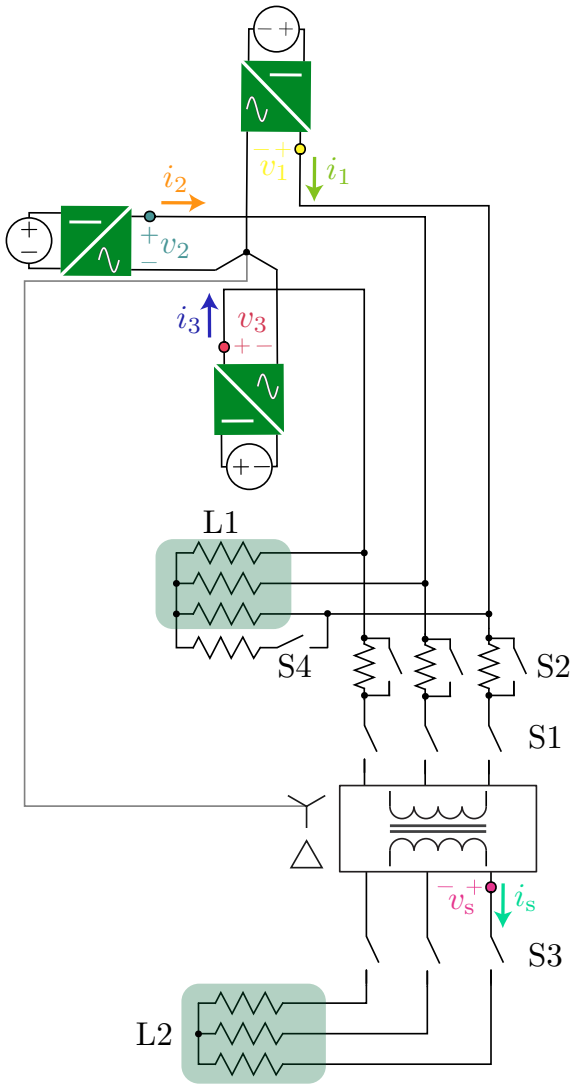

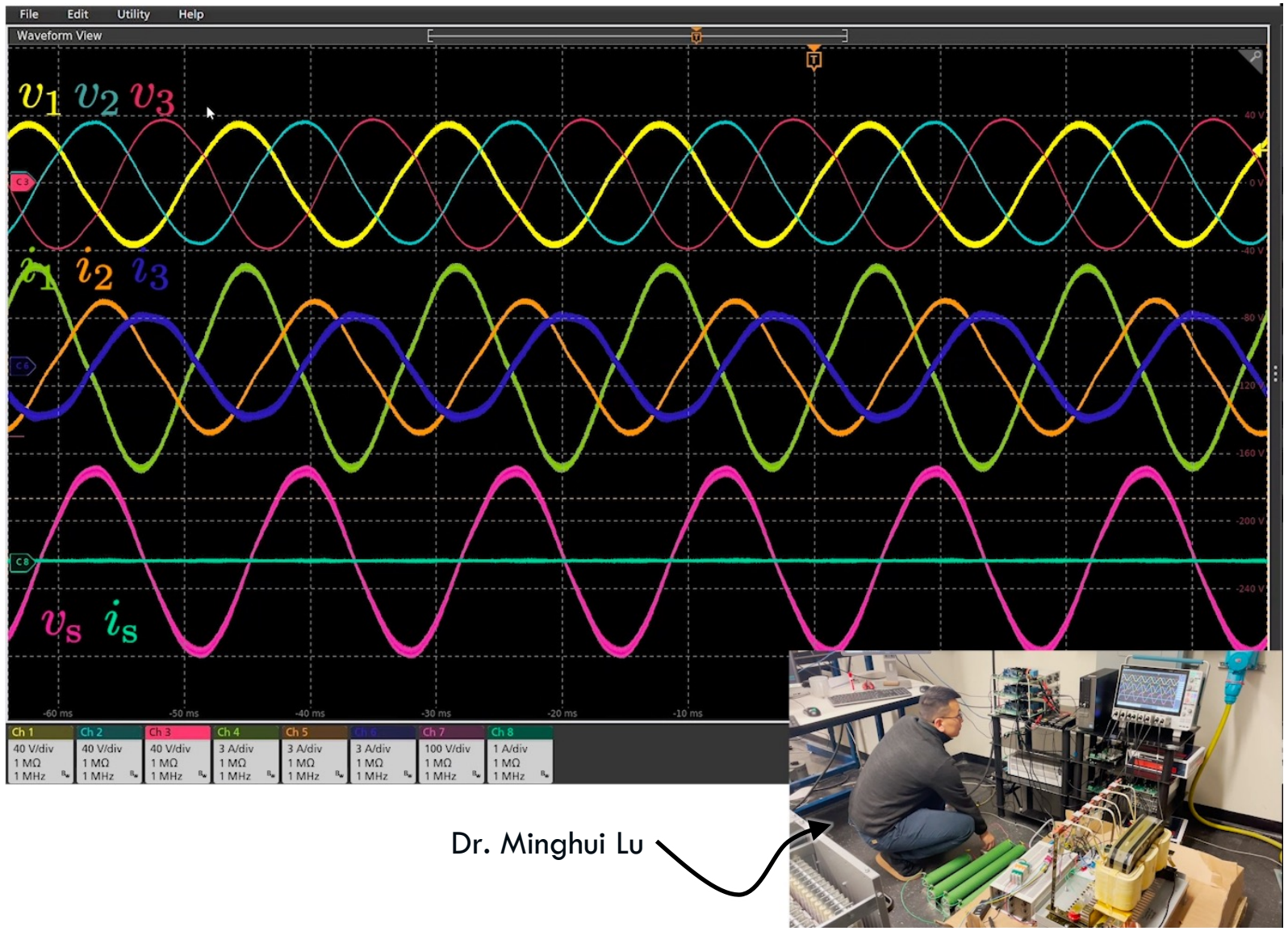

Dr. Minghui Lu

unifi consortium

universal interoperability for grid-forming inverters

SOLAR ENERGY TECHNOLOGIES OFFICE

U.S. Department Of Energy

Thanks for your attention!

Brian Johnson

brianbj@uw.edu