Active Load Control of Wind Turbine (blades)

Mario A. Rotea
Center for Wind Energy and Department of Mechanical Engineering
The University of Texas at Dallas

Partially supported by U.S. Department of Energy ARPA-E (award number E-AR0001011)

ARPA-E OPEN 2018 Project

Vision: reduce unsteady loads for large rotors with an electrical lift control actuator

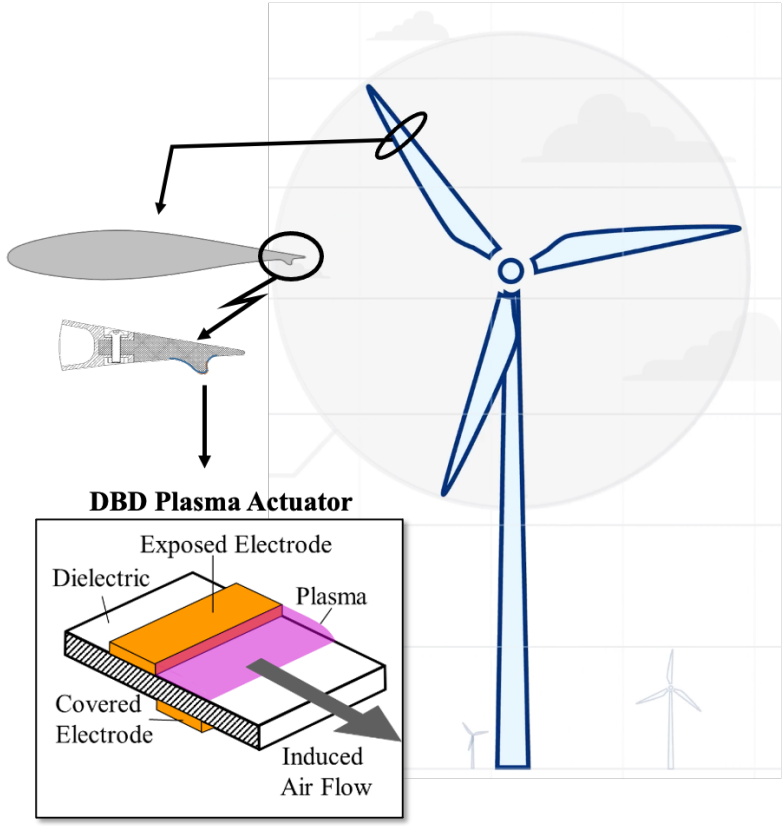

Project Team

ARCTURA
Lead organization
Actuator design & development
Test support

UT DALLAS The University of Texas at Dallas
Rotor design
Controls
Wind tunnel testing

Sandia National Laboratories
System integration
Field testing - SWiFT

tpi COMPOSITES
Blade design/fabrication

Active load control of wind turbines

- Can it disrupt the "square-cube" law? (Power $\propto L^2$ but mass $\propto L^{3>\epsilon>2}$)
- Some options for LCOE reduction
  - Increase blade length with same load envelope while mitigating mass increase
  - Increase blade life for same mass
- Early concepts from rotorcraft community in the late 80s into the 90s
  - Active rotor for damping augmentation, vibration suppression, performance enhancement
- Concepts then spread in the wind energy community
  - Individual blade pitch control (not likely for large multi-MW machines?)
  - Blade-mounted actuators to modify the local aerodynamics: TE flaps, microtabs, plasma actuators, shape changing blades, …

Plasma Actuator with Gurney Flap – "Controllable GF"[1]

- DBD plasma actuator to modify local lift
  - No moving parts
  - Lightweight
  - Instantaneous response
- Control objective is to reduce fatigue loads due to non-uniform, unsteady wind
- Control system drives actuator using load sensors at the blade root
- Demonstrate LCOE reductions across three turbine sizes: 3.4 MW, 10 MW and 15MW

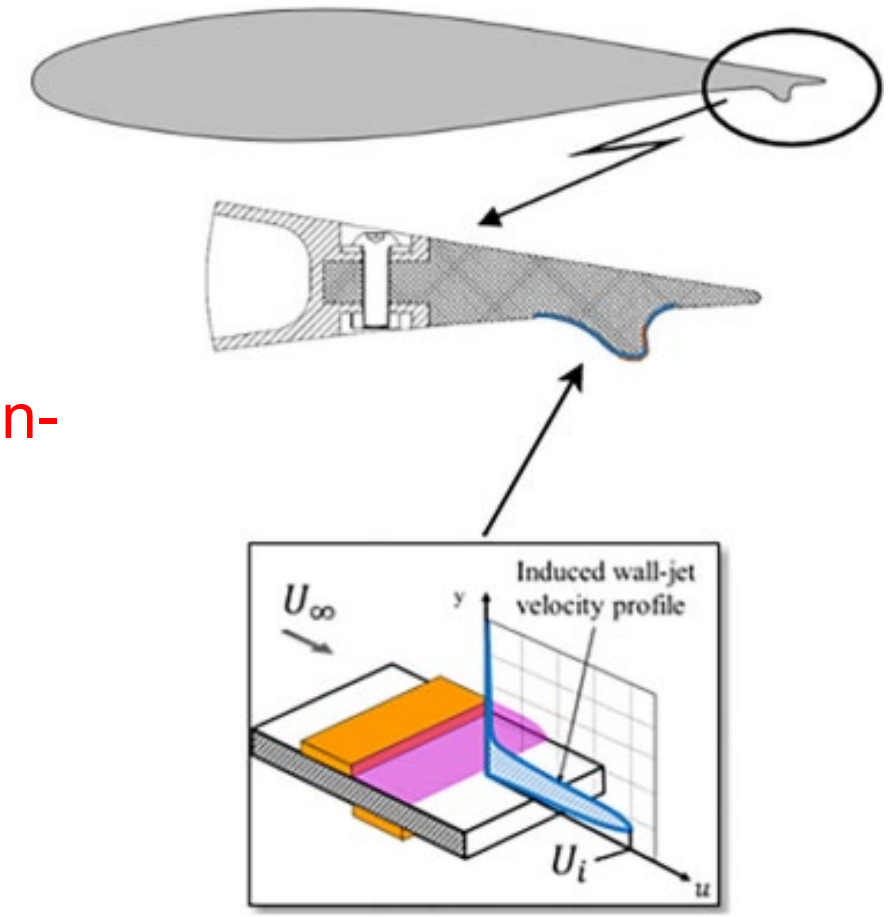

Courtesy of Arctura, Inc

Controllable GF Modeling[2]

- DBP plasma can modify the local lift coefficient C_L in the range of ± 0.2
- The actuators are located at 75% to 100% blade span
- No dynamics assumed for the controllable GF
- Modeled in NREL's OpenFAST using lift coefficient LUT
- One actuator command per blade

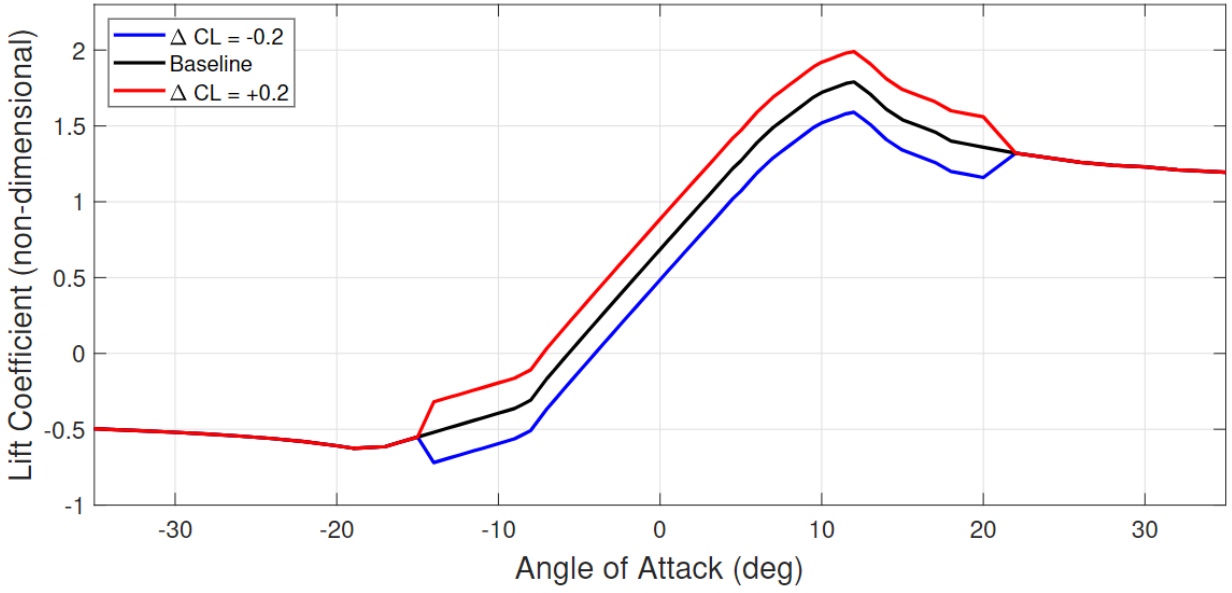

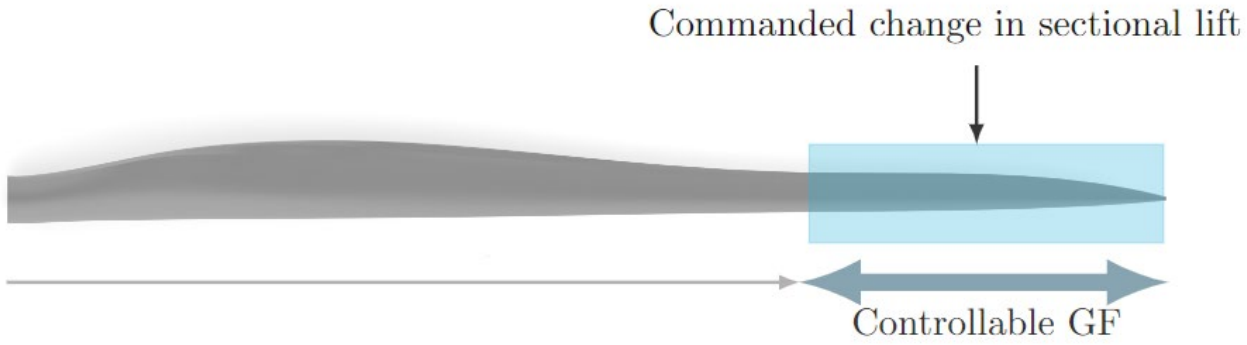

Sectional Lift Control[2] (SLC)

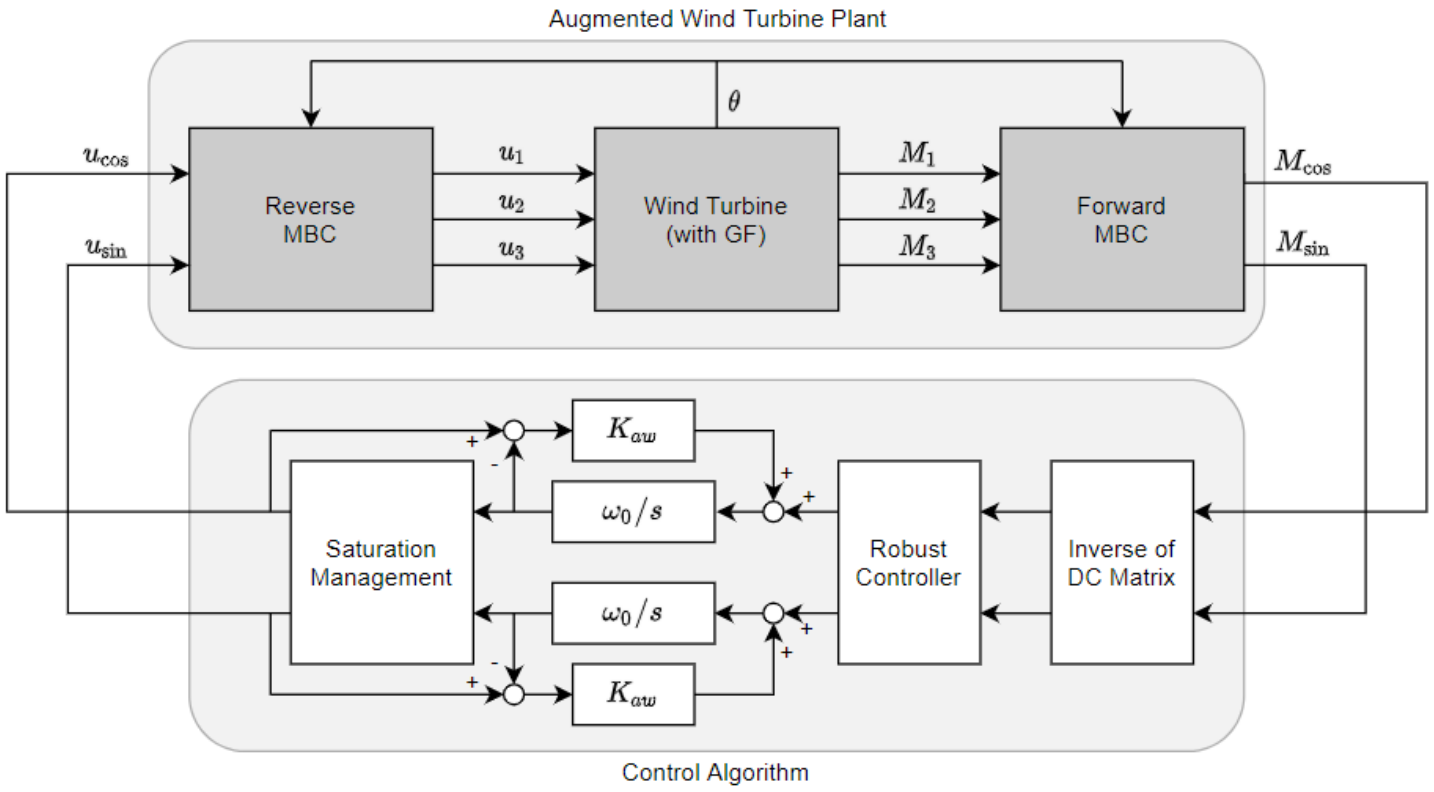

$G(s)$

DC Gain $G(0)$ easy to invert

SLC Details

- $G(s)$ can be obtained from experimental or simulation data
  - System ID in above-rated wind speed
  - Method can work in the field
- Select SLC "closed-loop bandwidth" $\omega_o < 1\text{P}$
- Set up a 2-channel integral SLC and evaluate multivariable robustness margin
- If robustness margin not acceptable design a 2-channel robust controller using H_∞ MIMO loop-shaping
- <u>Salient Features</u>
  - <u>Robustness guarantees</u> (40-60% modeling error can be expected)
  - A <u>single SLC</u> (designed in above-rated condition) works across the entire wind envelope (no need for gain scheduling)
  - The SLC can be used in below- or above-rated wind speed
  - No adverse impact on turbine power or pitch activity has been observed

The IEA 3.4A Turbine Model[3]

- Based on the IEA 3.4 MW research wind turbine
- The 3.4A incorporates the controllable GF to reduce mass and LCOE while preserving power and blade length
- Rotor mass reduction 5%-8%[3]
- LCOE reductions[3]
  - 1.2% to 2% with above-rated SLC only
  - 1.6% to 3.1% with full envelope SLC
  - Based on mass reductions and redesigned major components (rotor, drivetrain, tower, etc.)

Parameter	Value
Class and Category	IEC Class 3A
Rated Power	3.4 MW
Rated Rotor Speed	11.75 rpm
Rotor Diameter	130 m
Hub Height	110 m
Cut-in, Rated, Cut-out Wind Speed	4 m/s, 9.8 m/s, 25 m/s

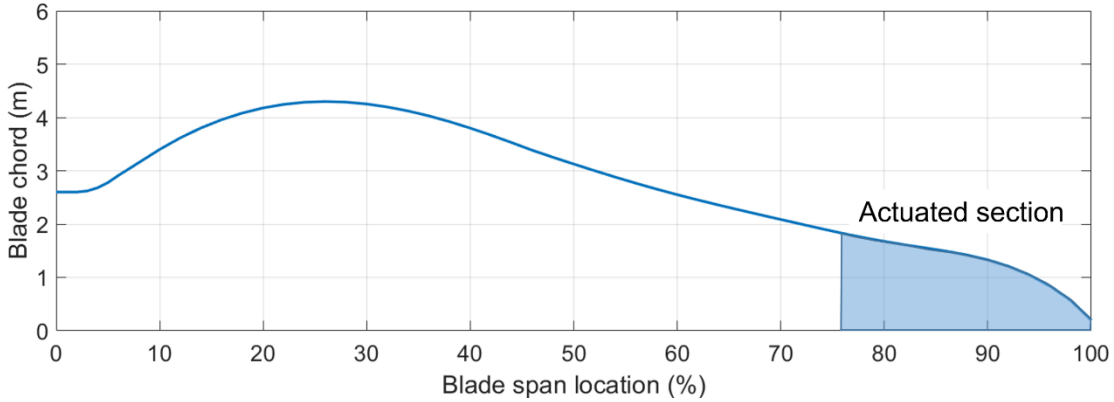

3.4A turbine blade with actuated section

OpenFAST Simulation – Flapwise Blade Root Bending Moment

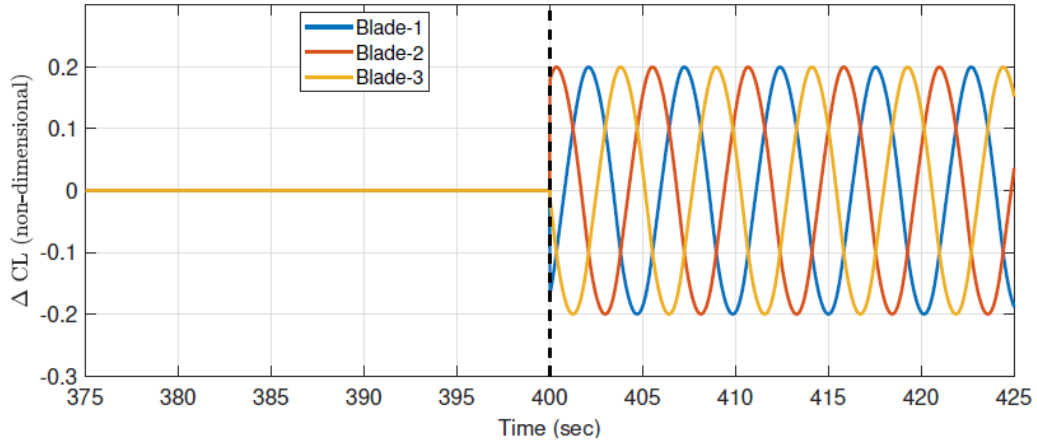

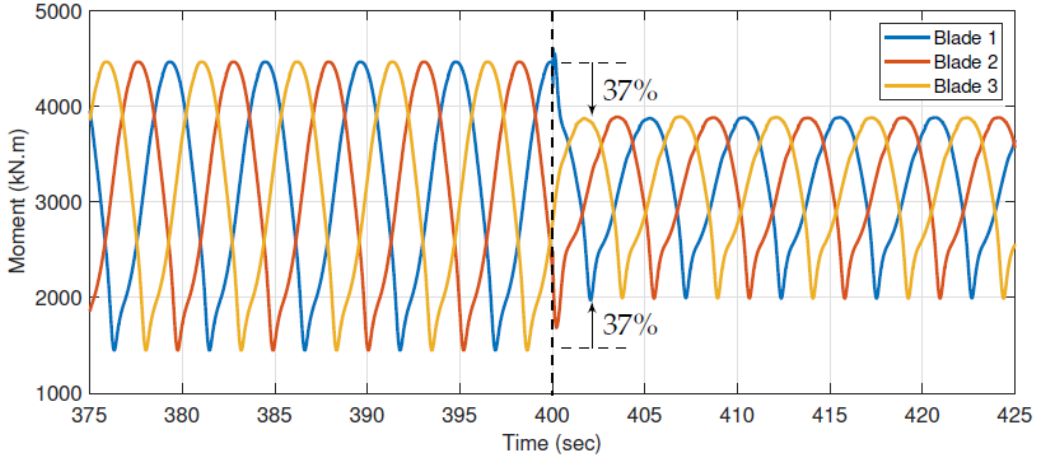

- 18 m/s wind speed with 0.2 shear exponent
- No turbulence
- ΔC_L commands add up to zero → no impact on "collective" turbine responses

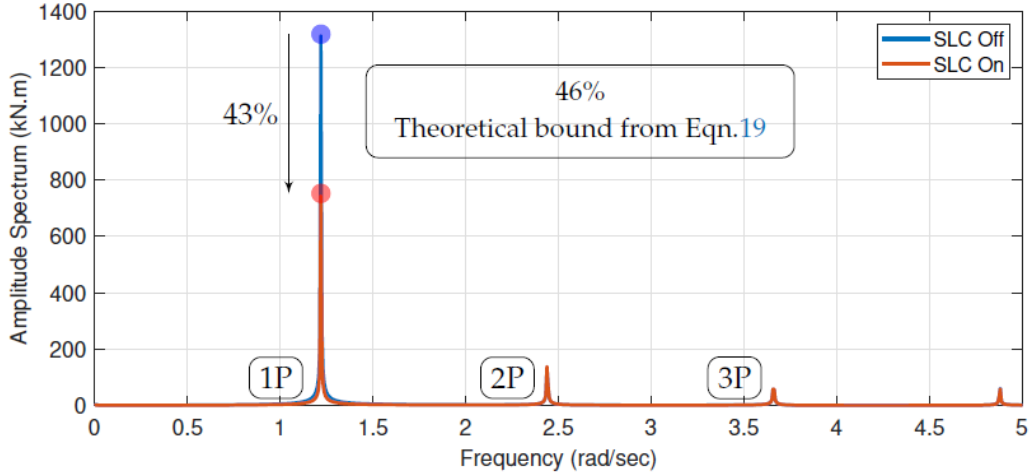

Damage Equivalent Loads – Flapwise Blade Root Bending Moment

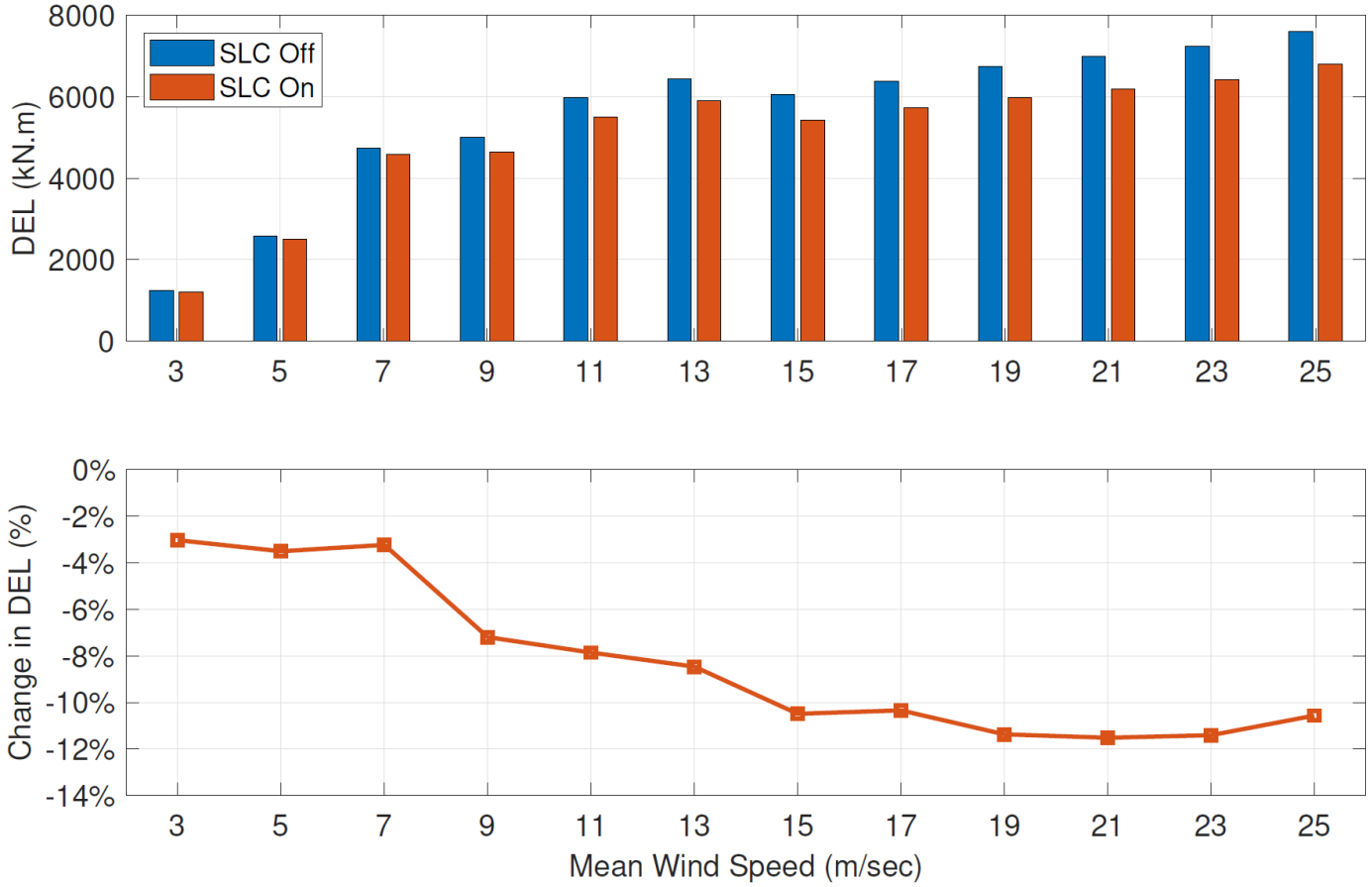

- SLC can reduce DEL as much as 12% (above-rated) and 8% (below-rated)
- No significant change in edgewise blade root bending and tower DELs
- SLC does reduce tip displacement fluctuations and peak values

Does gain scheduling with wind speed help?

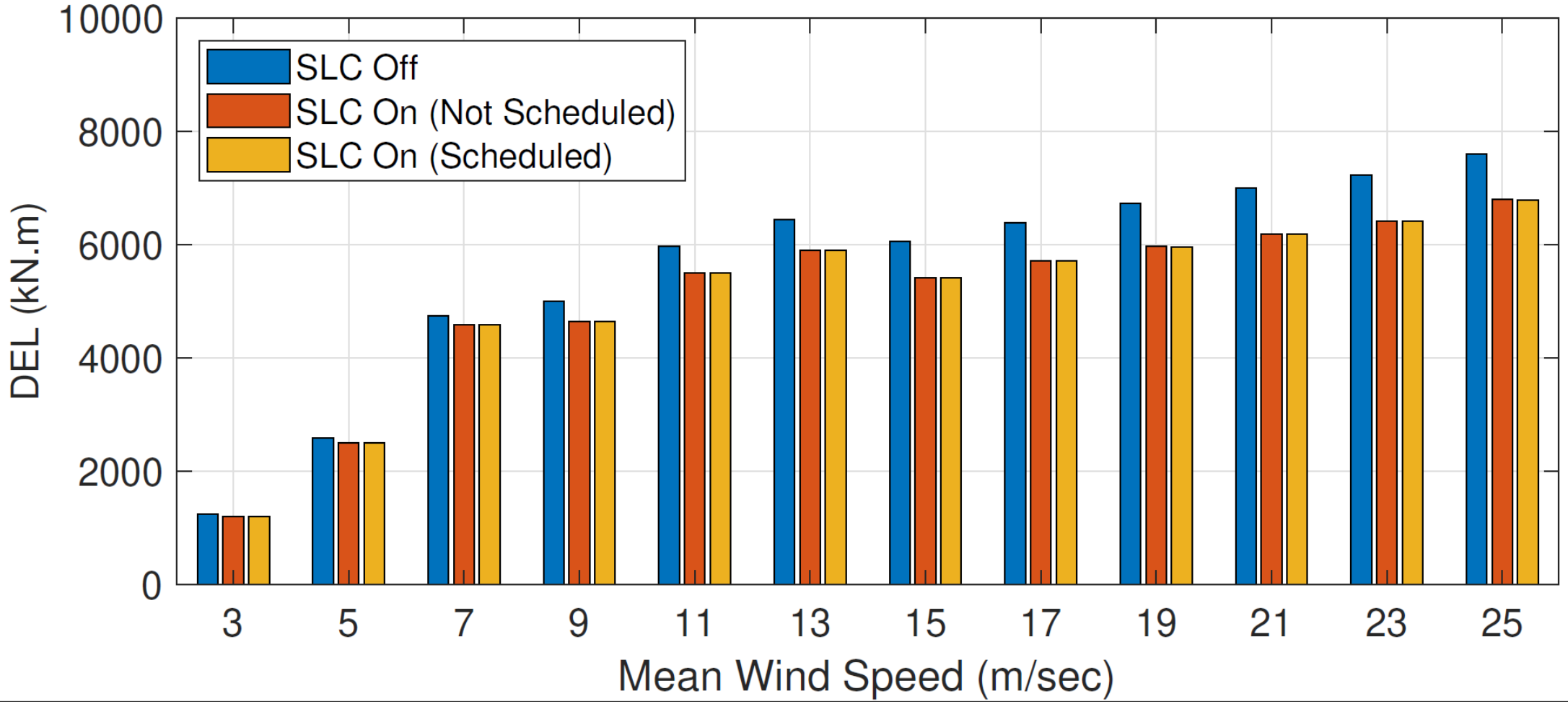

What are the trends with turbine size?[4]

Properties	3.4A MW	10 MW	15 MW
Class and category	IEC Class 3A	IEC Class 1A	IEC Class 1B
Rated power	3.4 MW	10.0 MW	15.0 MW
Rotor diameter	130 m	198 m	240 m
Hub height	110 m	119 m	150 m
Rated rotor speed	11.75 rpm	8.68 rpm	7.55 rpm

- Wind turbines of increasing size re-designed to incorporate controllable GFs
- SLCs designed for each turbine preserving
  - The % span of the controllable GF and the plasma actuator control authority
  - The SLC response time and multivariable robustness margin

DEL Comparison – Flapwise Blade Root Bending

- SLC can achieve greater DEL reductions for larger rotors
- Greater reductions require more sophisticated SLCs – no mass increase

Turbine	# of SLC dynamic states
3.4 MW	2
10 MW	8
15 MW	6

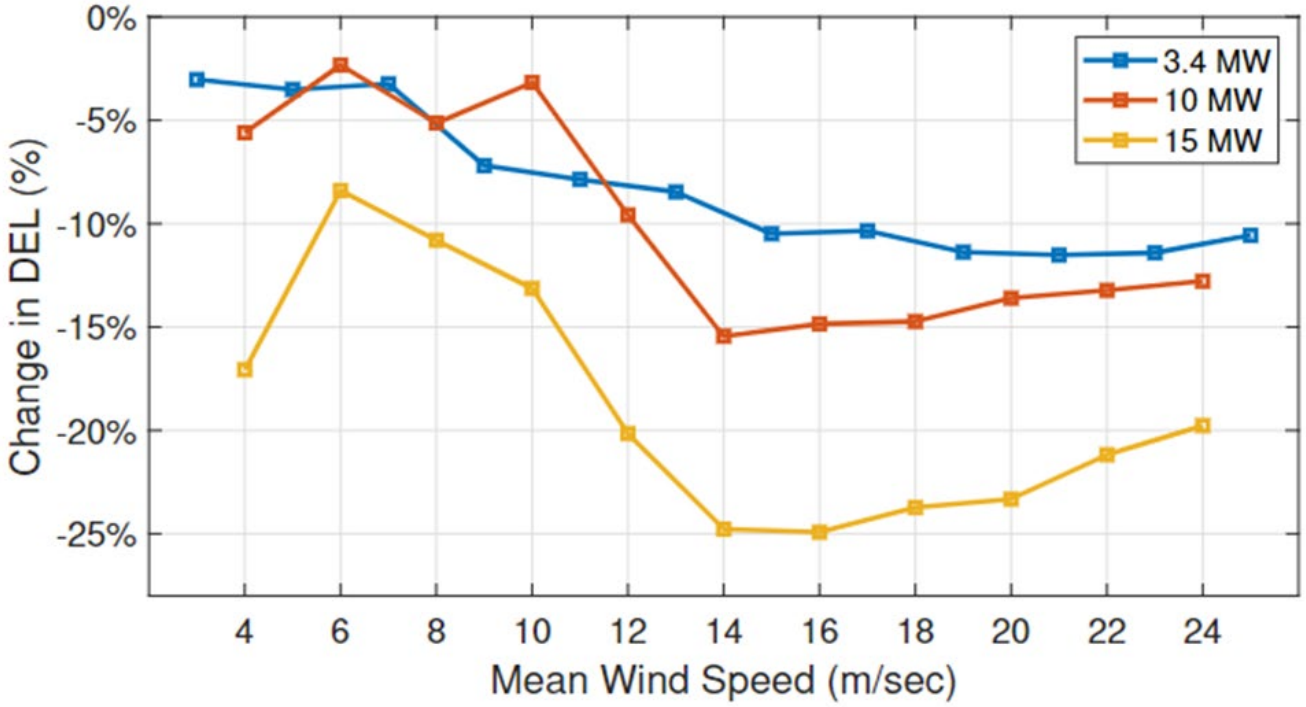

Can SLC deal with transient wind gusts?[5]

No, but the addition of a Gust Alleviation Controller (GAC) to command the controllable GFs <u>collectively</u> can reduce loads due to wind gusts

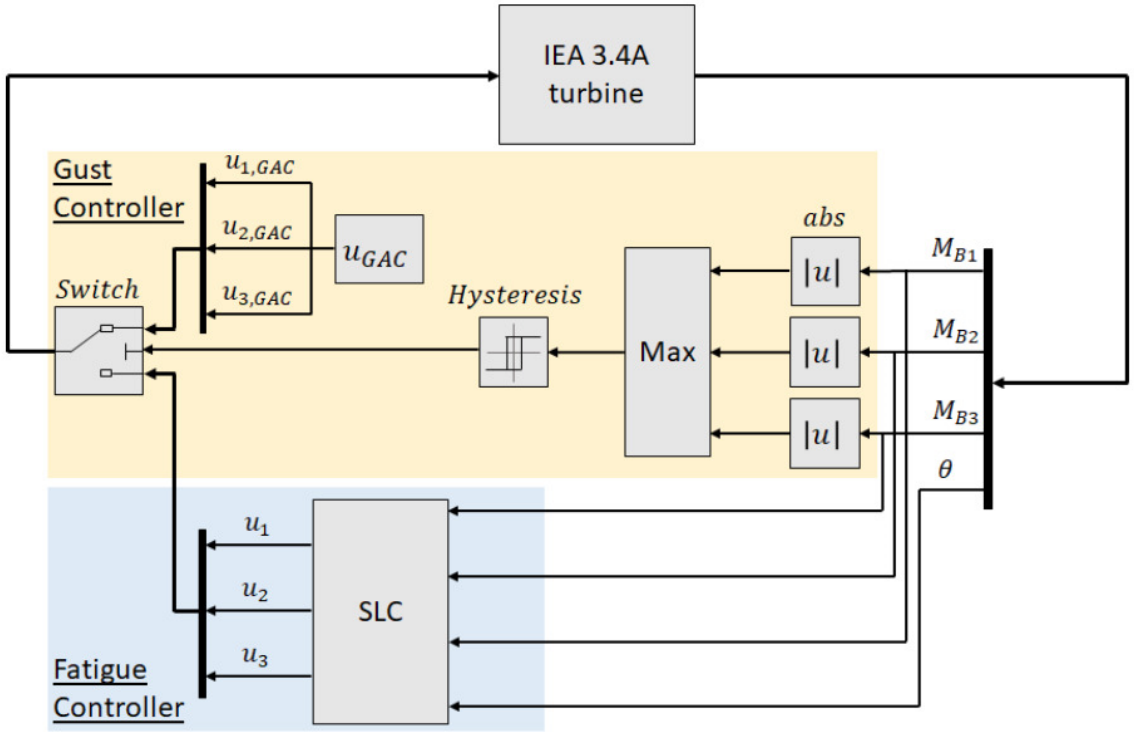

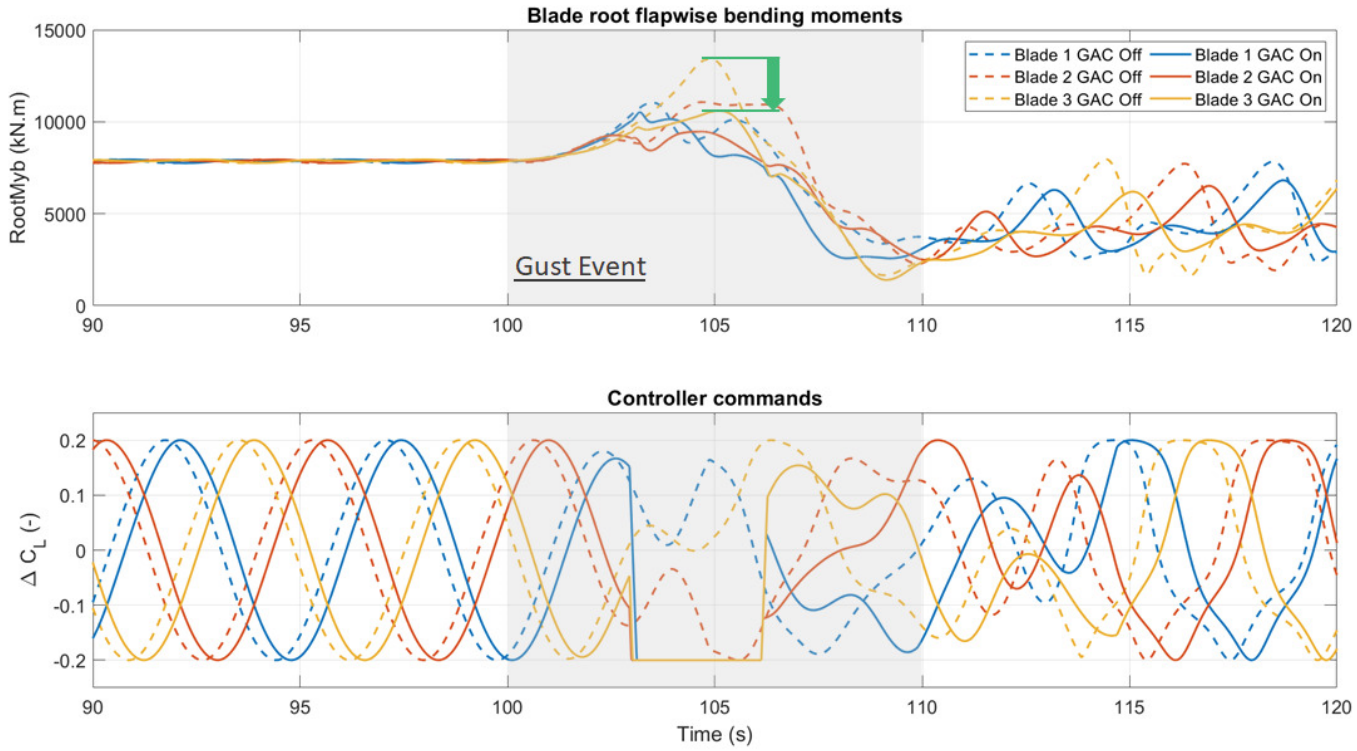

Conclusions

- Controllable GF with DBD plasma actuator has the potential to disrupt mass growth trends with rotor size
- SLC – a feedback controller to command controllable GF
  - Can be designed from experimental or simulation data – robust to modeling uncertainty
  - Reduction of controlled loads in all wind conditions
  - Does not interact with main turbine controller
  - Single SLC (independent of wind speed) works in all conditions
  - Agnostic to the specific actuator technology
- Fatigue DELs reduced by 4-8% below rated wind speeds and 8-12% in above rated wind speeds for a 3.4 MW research turbine model
- SLC benefits (fatigue load reduction) increases with turbine size
- SLC can be augmented with a GAC for a complete load control solution

Key References

1. Griffith, D. T., Fine, N. E., Cooney, J. A., Rotea, M. A. & Iungo, V. G. (2020). Active aerodynamic load control for improved wind turbine design. Journal of Physics: Conference Series, 1618(5)
2. Gupta, A., Rotea, M. A., Chetan, M., Sakib, M. S., & Griffith, D. T. (2021). A methodology for robust load reduction in wind turbine blades using flow control devices. Energies, 14(12)
3. Chetan, M., Sakib, M. S., Griffith, D. T., Gupta, A., & Rotea, M. A. (2021). Design of a 3.4-MW wind turbine with integrated plasma actuator-based Load Control. Wind Energy, 25(3)
4. Gupta, A., Rotea, M. A., Chetan, M., Sadman Sakib, M., & Todd Griffith, D. (2022). Effect of wind turbine size on load reduction with active flow control. Journal of Physics: Conference Series, 2265(3)
5. Liu, C.; Gupta, A.; Rotea, M.A. Wind Turbine Gust Load Alleviation with Active Flow Control. Energies 2022, 15, 6474