U.S. DEPARTMENT OF ENERGY | Nuclear Energy

The lesson learned from CIRFT framework and its implications to SNF transport canister development

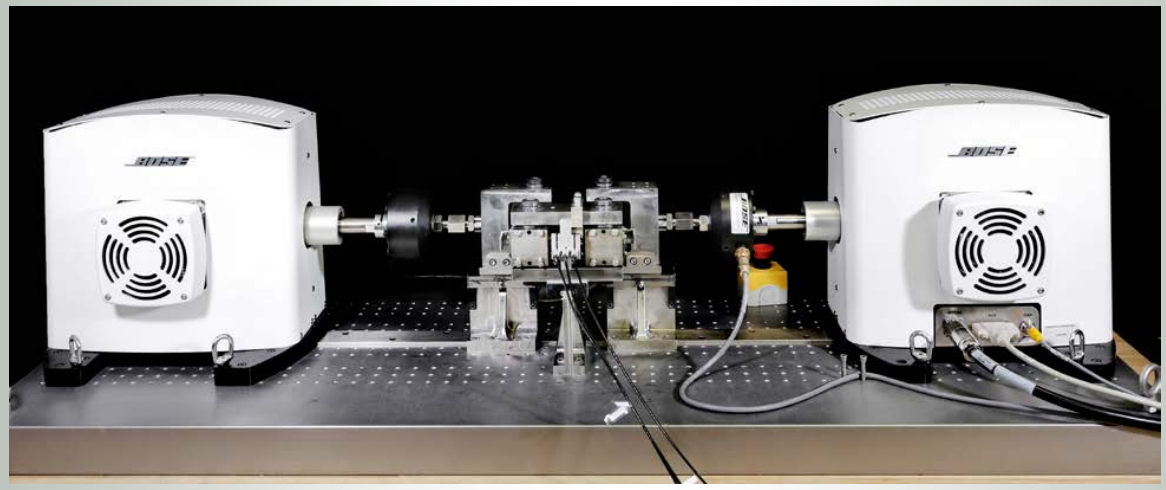

Jy-An John Wang

Materials Science and Technology Division
Oak Ridge National Laboratory

2015 DOE UFDC Program Working Group Meeting
June 9–11, 2015
Las Vegas, NV

HBU HBR static tests show significant increase in bending moment resistance

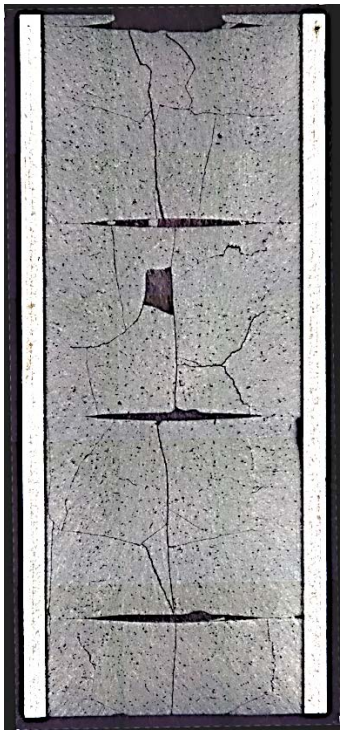

Untested HBR SNF

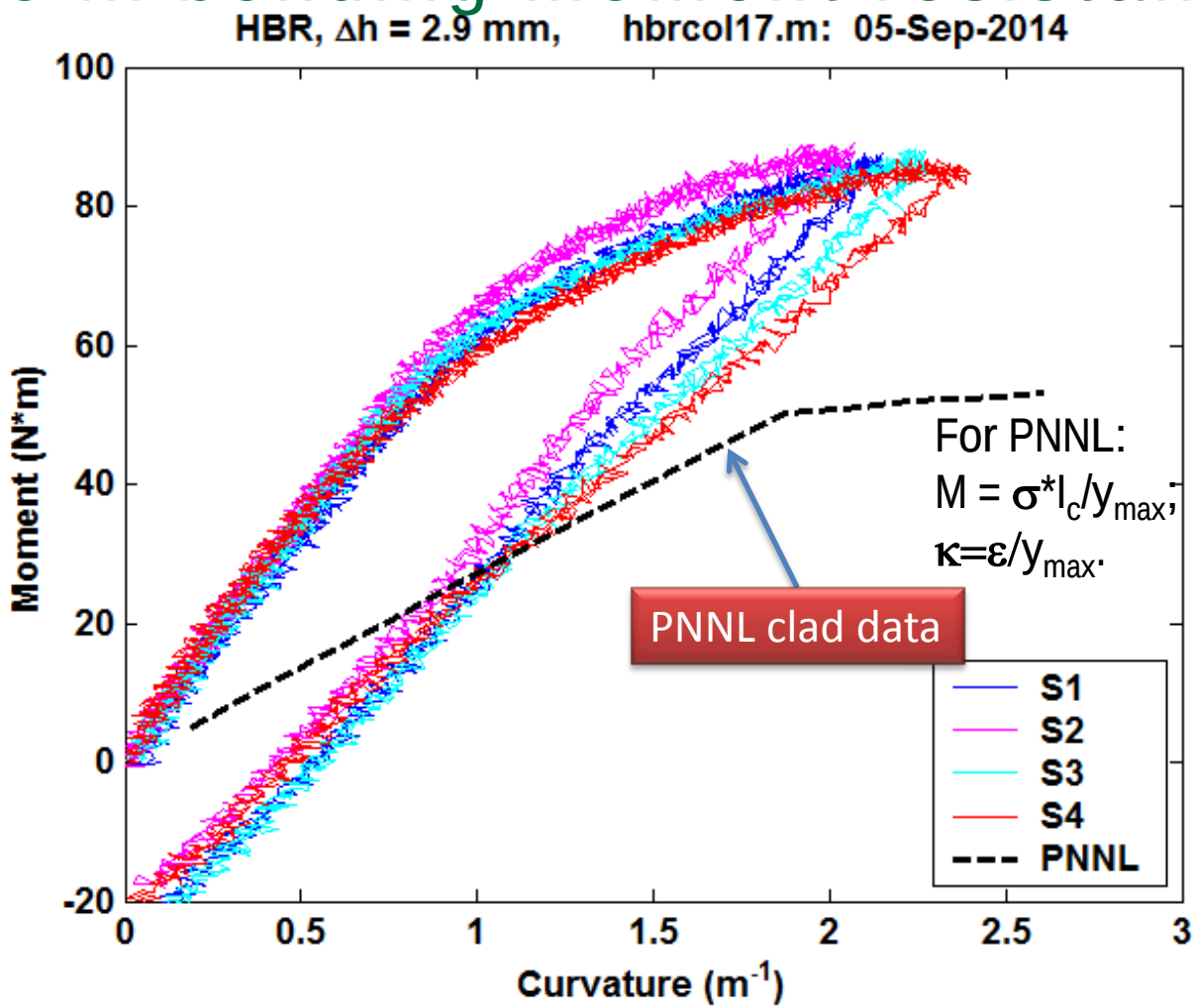

- The difference between CIRFT and PNNL curves measures the contribution of fuel pellets against bending. At 1.87 m^{-1}, approximately 59% of moment comes from clad and the rest from fuel pellets.

HBU HBR SNF fatigue testing reveals fatigue endurance limit and different damage rates

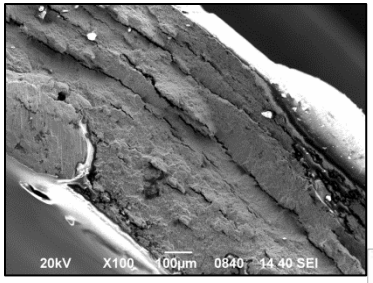

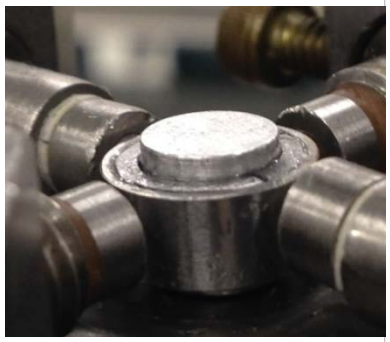

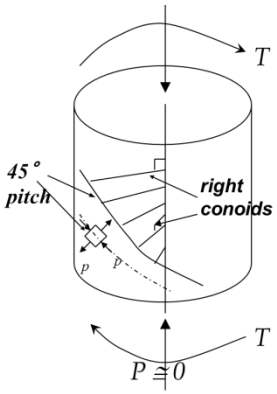

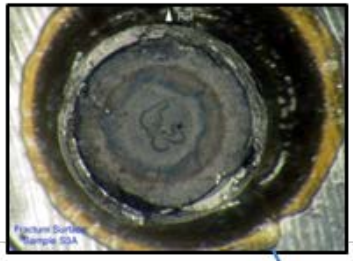

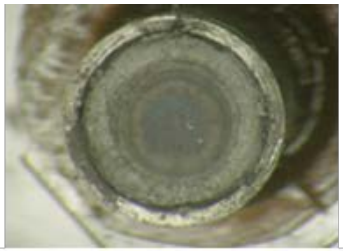

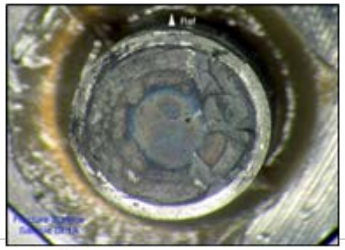

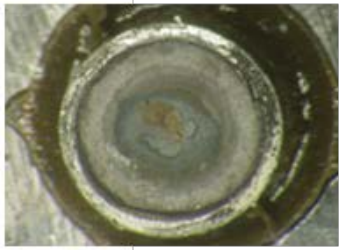

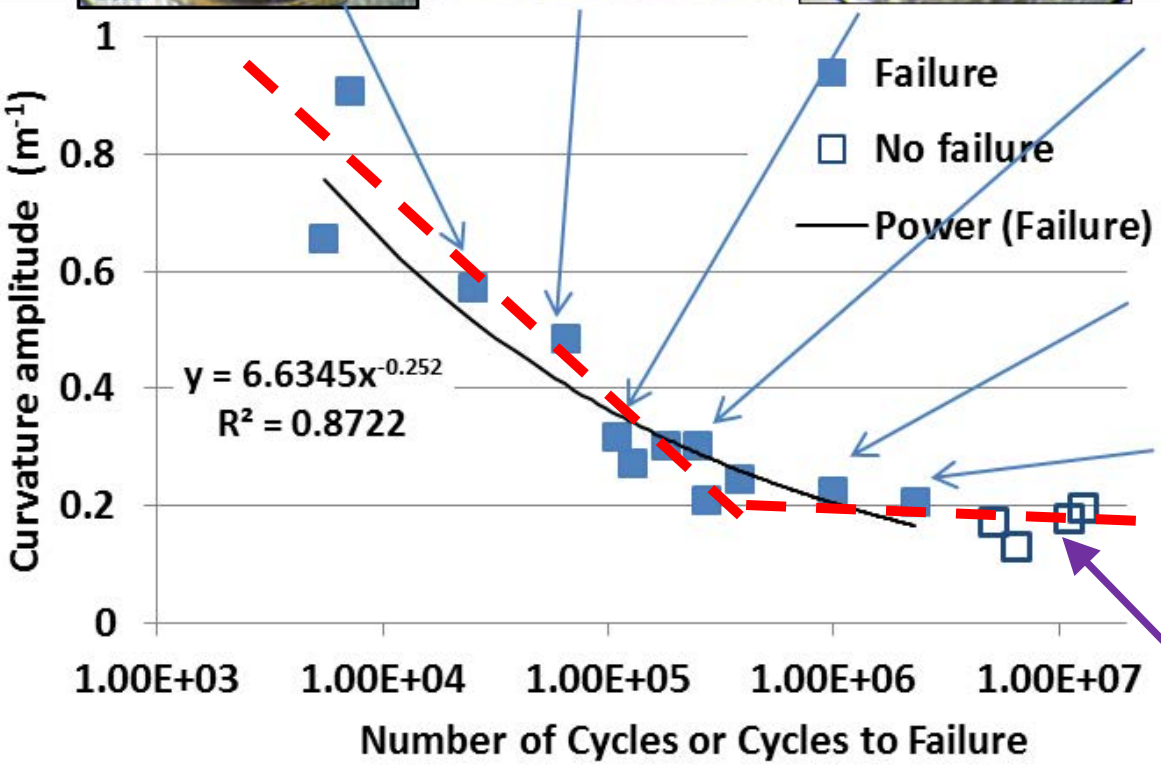

Endurance limit

Challenges in CIRFT hydride reorientation test

Bias of preparing CIRFT hydride reorientation (HR) sample -

- Heat source is from clad outer surface (~400C), reduce radial compressive stress, thermal gradient spread to fuel core.
- In-situ pressurization with 2400psi pressure may balance /reduce radiation crimping effect (of 2450 psi coolant pressure).
- Combined effect of thermal annealing & clad pressurization; could permanently enlarge the clad inner radius.
- Control CIRFT tests to quantify the above three effects are warranted, in order to properly estimate the net HR effect from CIRFT HR data while comparing to CIRFT SNF baseline data.

CIRFT combined shock and fatigue loads shows reduced effective lifetime

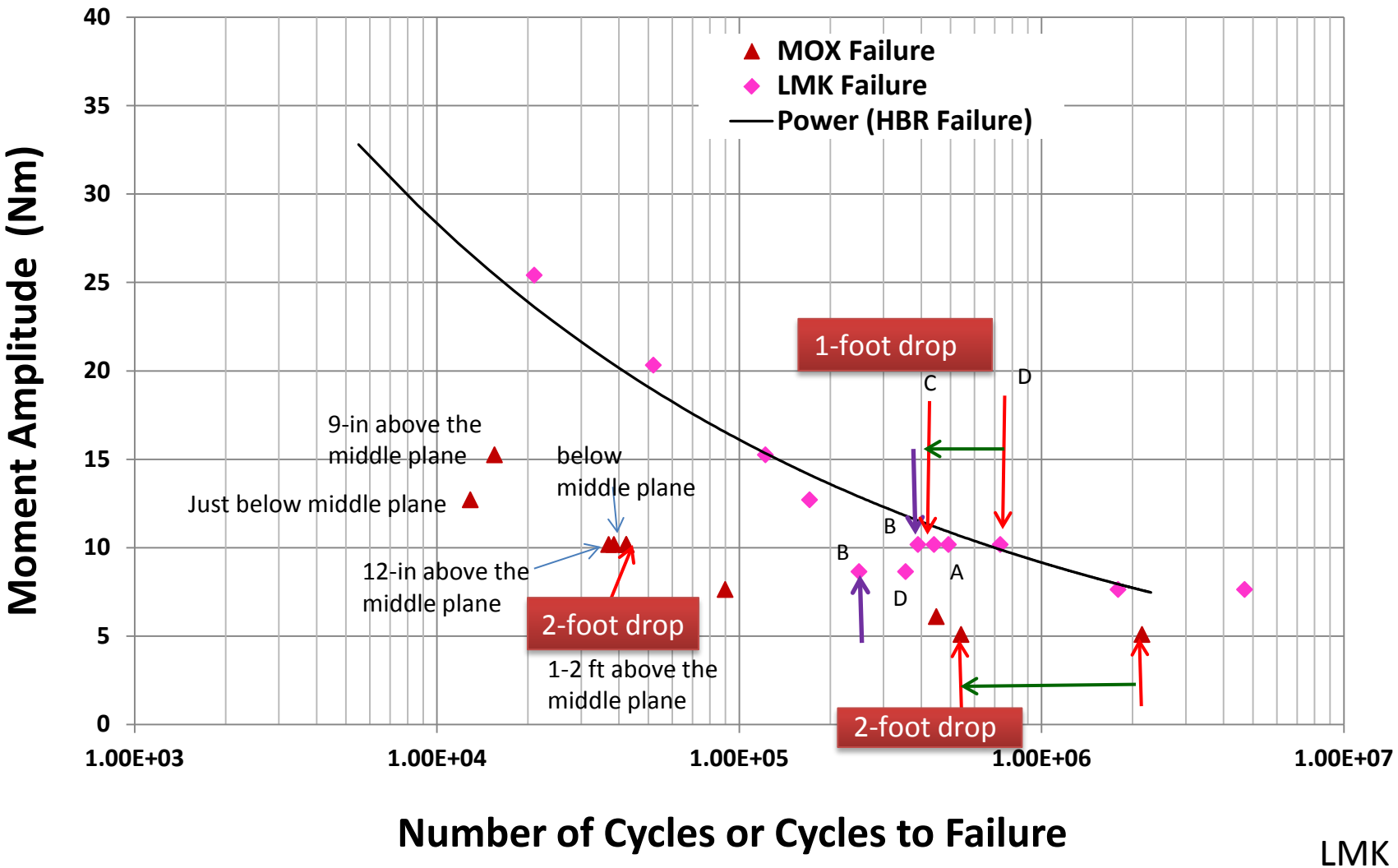

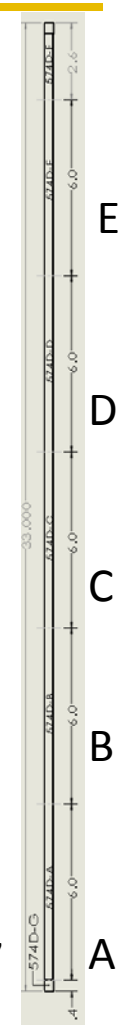

LMK Rod

HBU SNF fuel weakest site is resided at P-P interface, high hydride, spacer grids region

Fatigue 8.8 N-m

< 300K

> 11 M

~ 2 M

Normal vibration

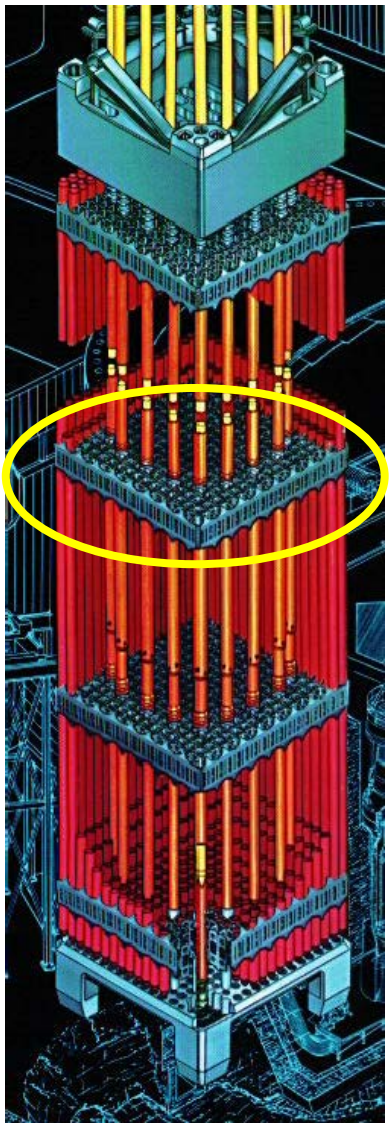

PWR Environment

High Temp

High Burn-up

High constraint

- Fuel type
- Clad type
- Fuel dimensions
- Temperature
- Burn-up
- Hydriding
- Mechanical interaction

PWR/BWR fuel assembly load transferring mechanism

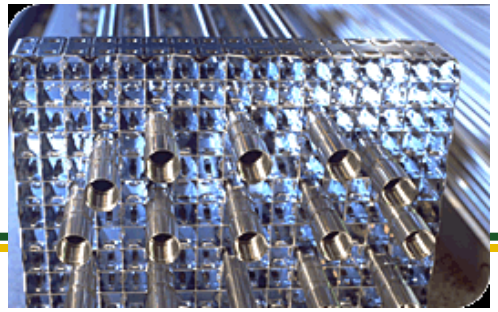

- Fuel assembly skeleton, formed by guide tubes & spacer grids, are designed to constrain fuel rods in a reactor operation.
- In a vertical set-up, the skeleton experienced with fluid dynamics induced vibration loads, as well as rods dead weight, transmitted though spacer grids to guide tubes, in reactor operation.
- In a horizontal set-up under SNF transport of NCT, the skeleton will be the primary load bearing members for carrying and transferring the bending vibration loads within SNF fuel assembly.

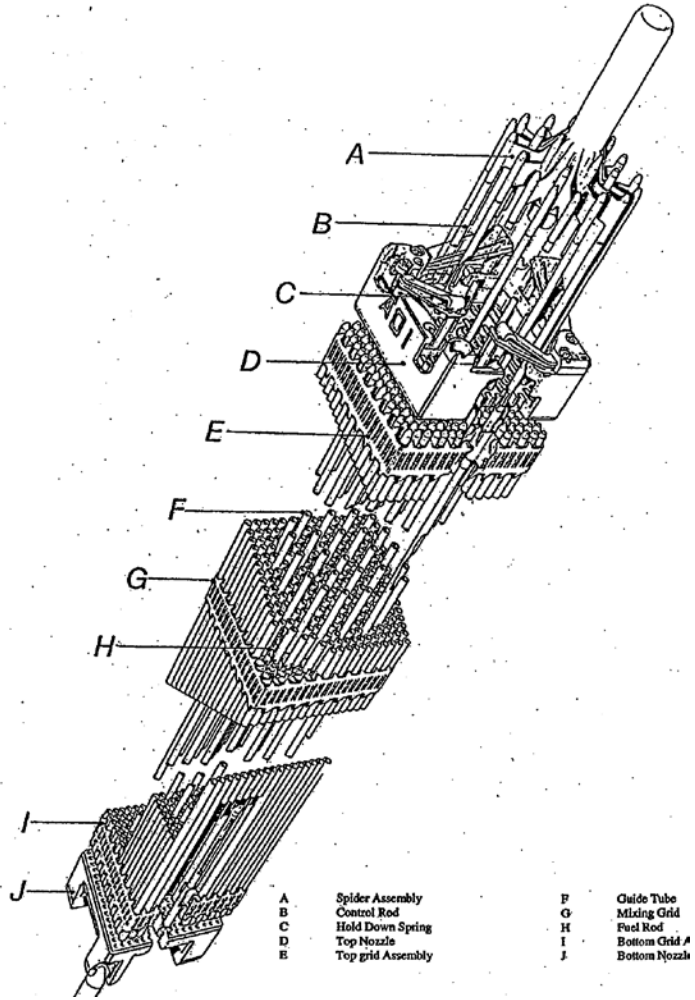

Guide tube and spacer grids become primary load bearing in horizontal set-up

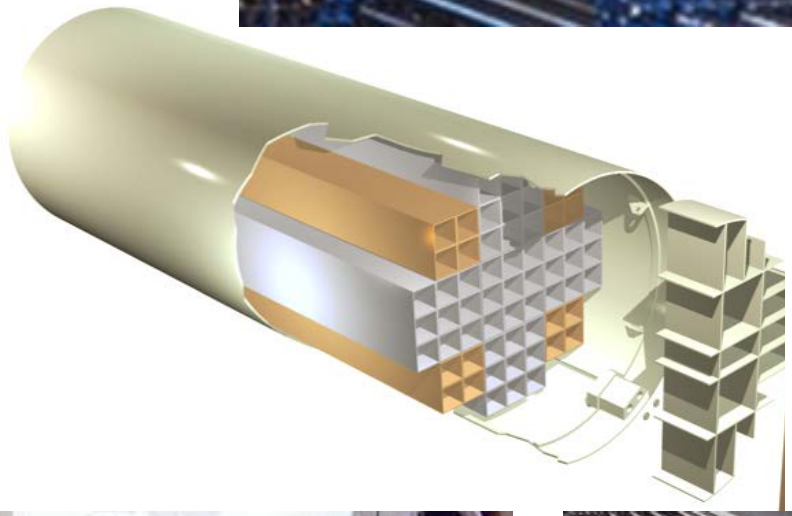

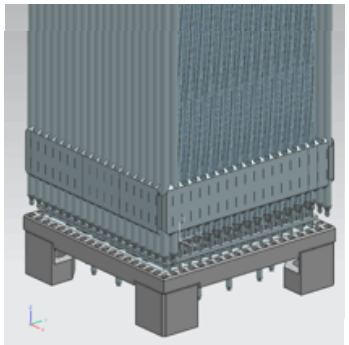

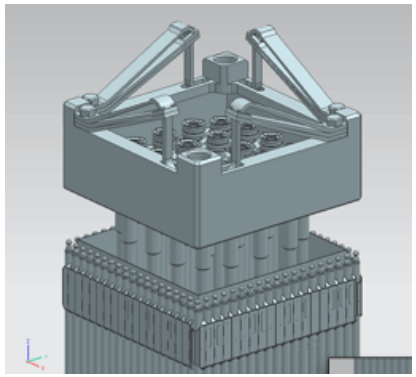

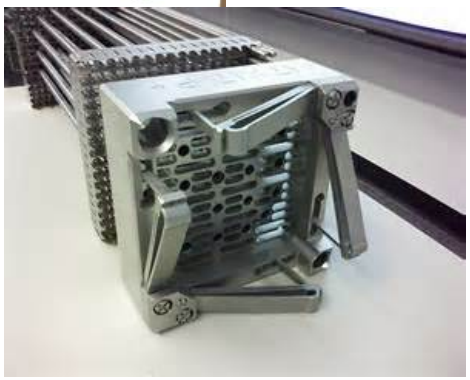

SNF dynamic loading are from inertia and assembly system contact-impact loads

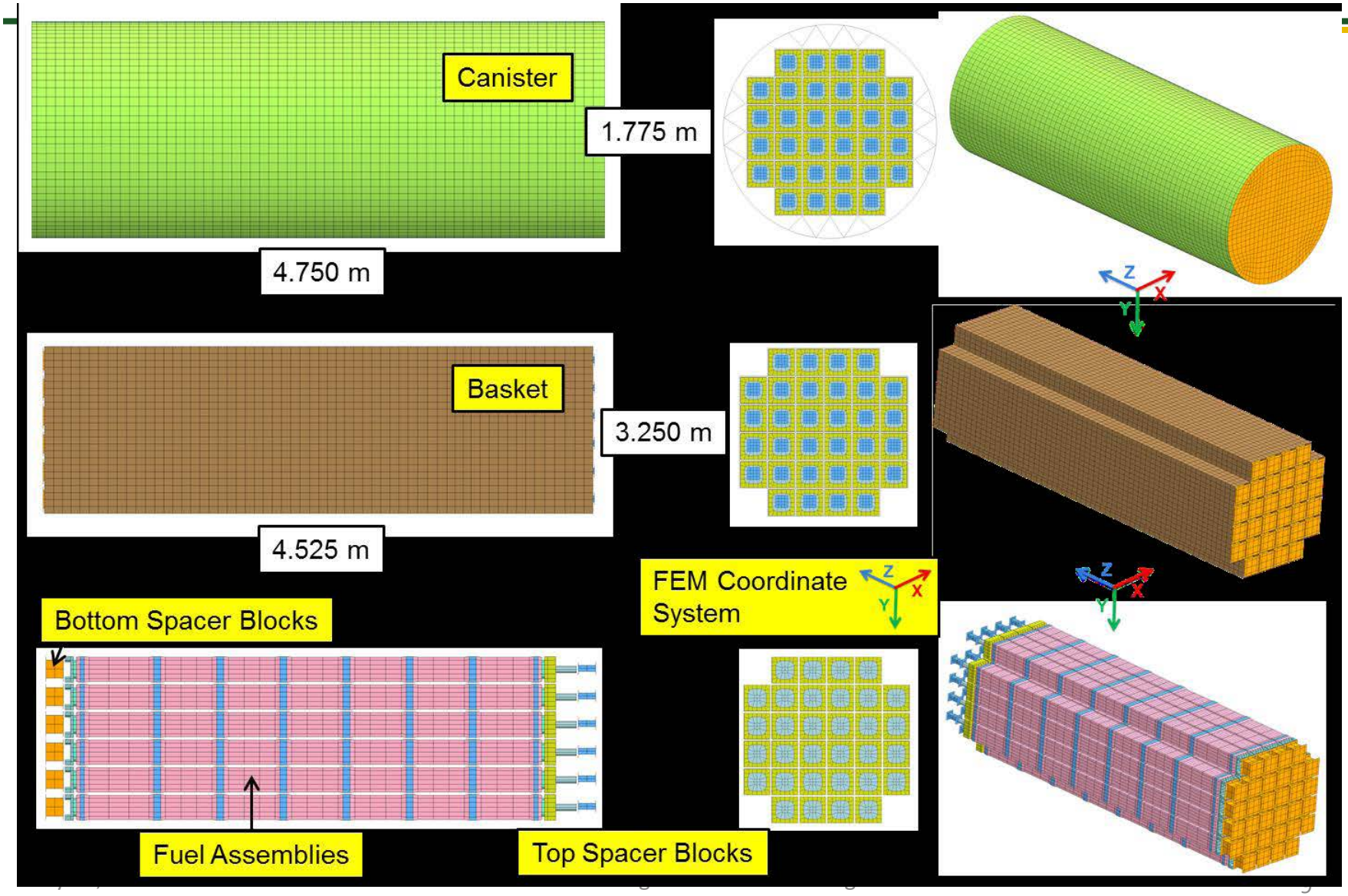

Rod initial velocity of 0.62 mm/s at 10 μ-m clear space between rod/dimple generates 0.46N contact impact in PWR operation

In a vertical skeleton set-up of reactor, fuel vibration is generate by hydrodynamic load

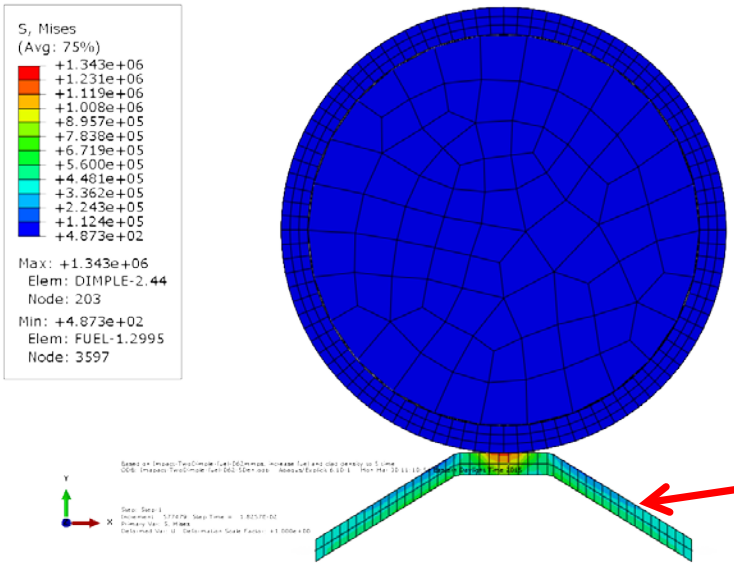

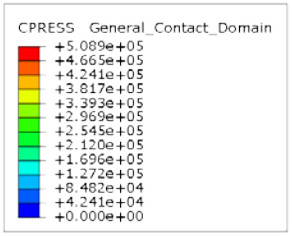

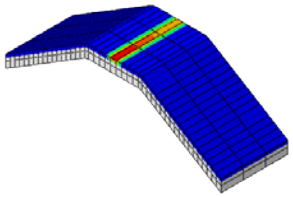

Spacer dimple

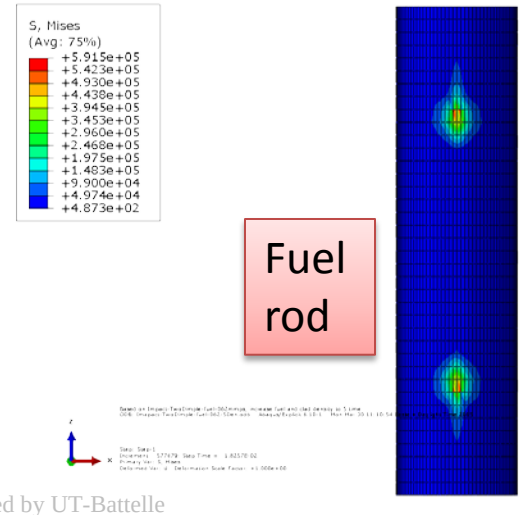

Fuel rod

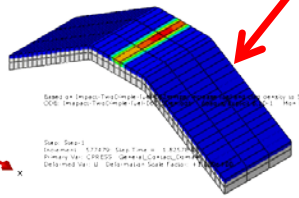

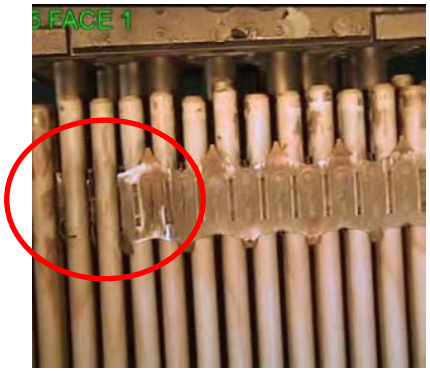

Reaction force = 0.46N on one dimple, with initial gap of 10 micro-m

Fuel assembly vibration integrity/reliability, including guide tubes and spacer grids, can significantly affect MPC canister design concept

PWR

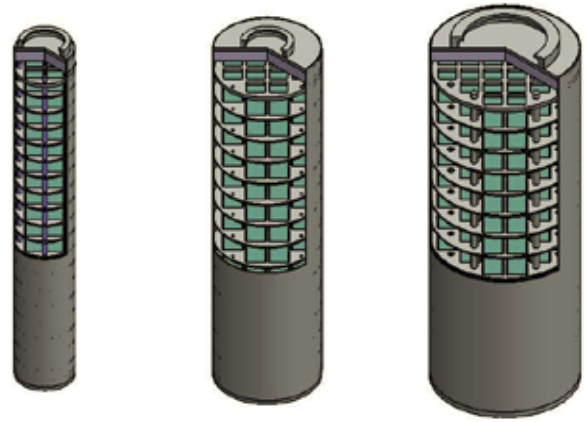

SMALL STAD (4-PWR SHOWN) MEDIUM STAD (12-PWR SHOWN) LARGE STAD (24-PWR SHOWN)

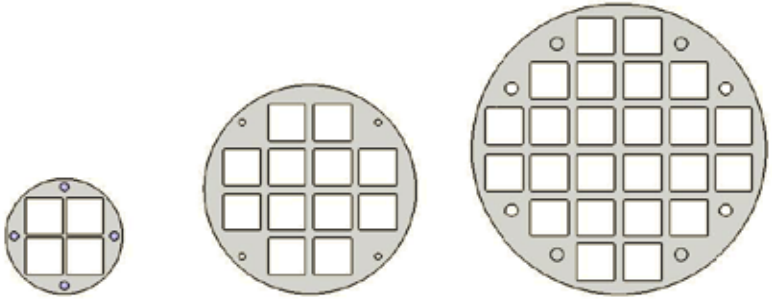

SMALL STAD (4-PWR SHOWN) MEDIUM STAD (12-PWR SHOWN) LARGE STAD (24-PWR SHOWN)

BWR

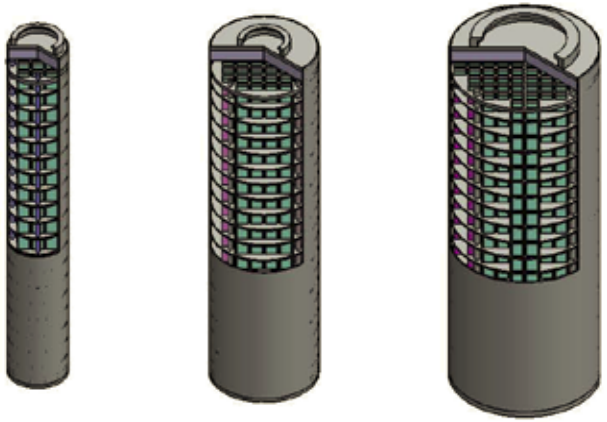

SMALL STAD (9-BWR SHOWN) MEDIUM STAD (32-BWR SHOWN) LARGE STAD (68-BWR SHOWN)

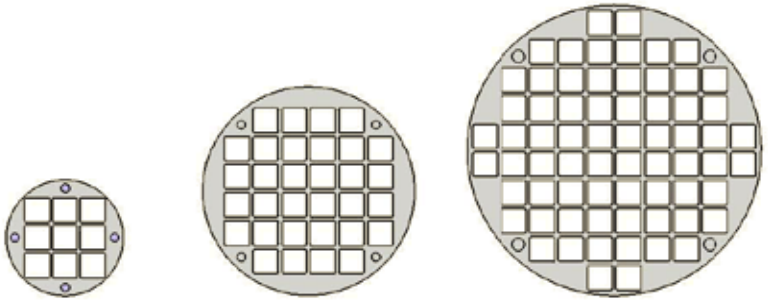

SMALL STAD (9-BWR SHOWN) MEDIUM STAD (32-BWR SHOWN) LARGE STAD (68-BWR SHOWN)

Structural dynamic response depends on system stiffness, damping, and mass

Eqn. of Motion: m d^2x/dt^2 + c dx/dt + k x = P(t)

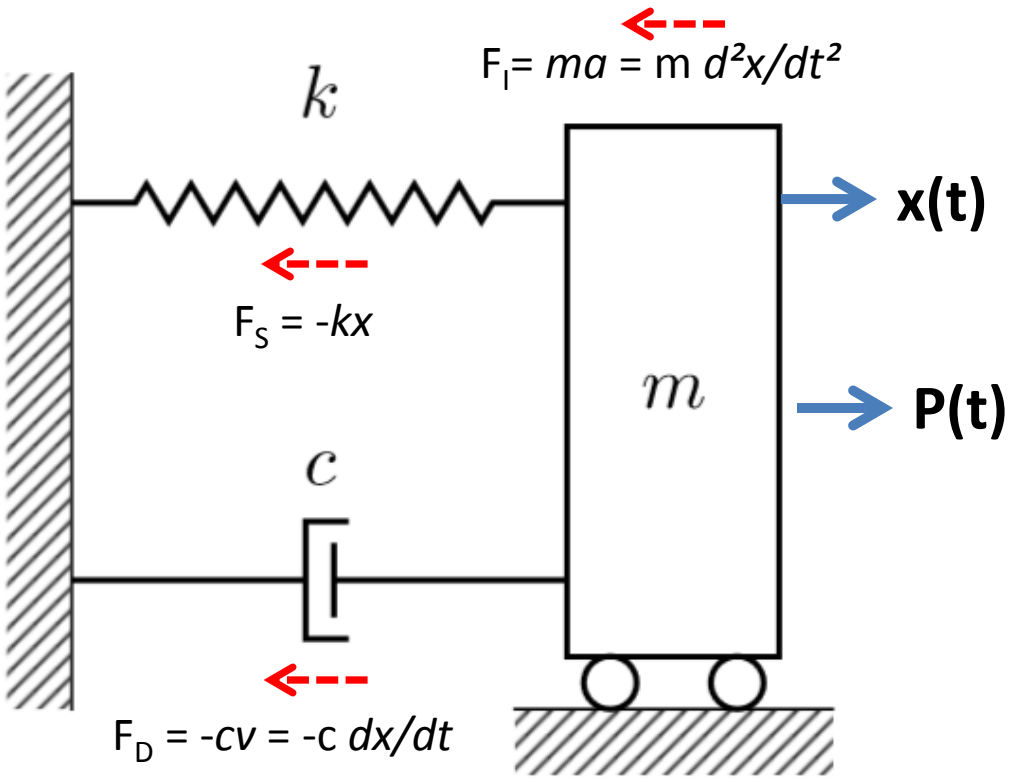

Nature frequencies depend on system's stiffness and mass.

SNF rod vibration under NCT is also characterized by the rod EI (rigidity)

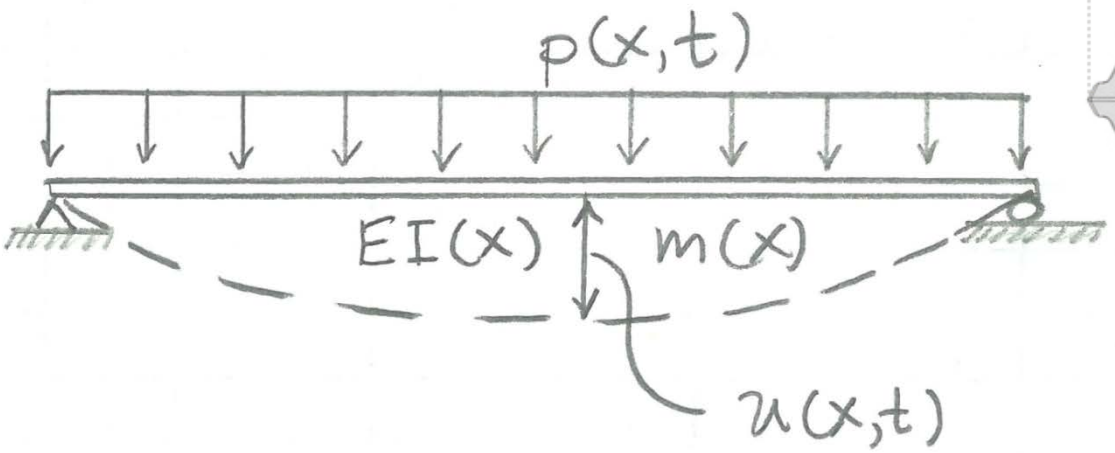

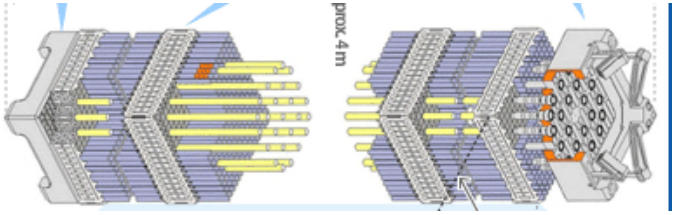

$$u(x,t) = \sum_{i=1}^{n} u_i(t)\,\psi_i(x) = u_1(t)\,\psi_1(x) + u_2(t)\,\psi_2(x) + \cdots$$

$$\boxed{\bar{m}\,\frac{\partial^2 u_y}{\partial t^2} + \frac{\partial^2}{\partial x^2}\left(EI\,\frac{\partial^2 u_y}{\partial x^2}\right) - \frac{\partial}{\partial x}\left(N\,\frac{\partial u_y}{\partial x}\right) = p_y}$$

EQUATION of EQUILIBRIUM
- STRONG FORM

SNF assembly dynamic interactions, including skeleton, fuel rods, and canister basket wall, can significantly increase impact loading intensity and frequency within fuel assembly & basket/canister structure

- The aging or fatigued skeleton system can increase fuel-rod to fuel-rod contact impact loading intensity as well as enhance SNF resonance vibration deformation probability.
- The contact interactions between fuel rods and basket wall also can further increase fuel rod transient shock loads frequencies.
- Proper structure reinforcement of canister design is warranted to overcome the static & dynamic vibration loads (external cask vibration and internal amplification from fuel assembly system vibration & its interaction transient shocks)
- Mitigation includes increase system damping potential to reduce vibration intensity.

NCT Cask random vibration provides the external loading driver to SNF assembly

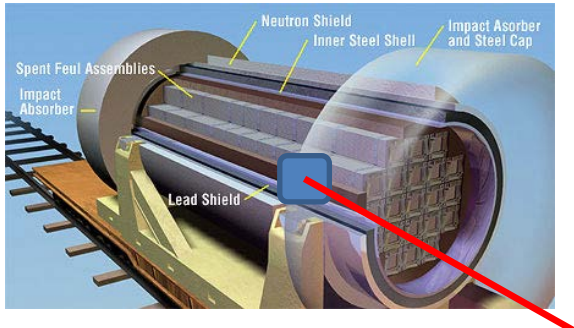

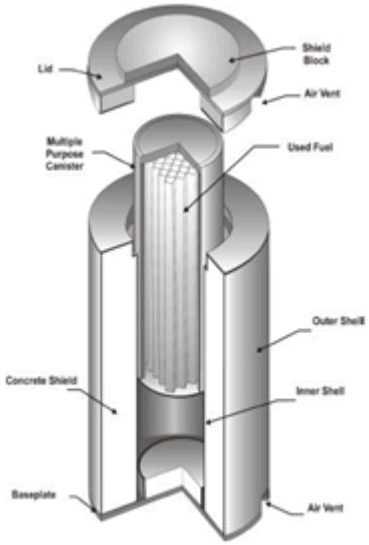

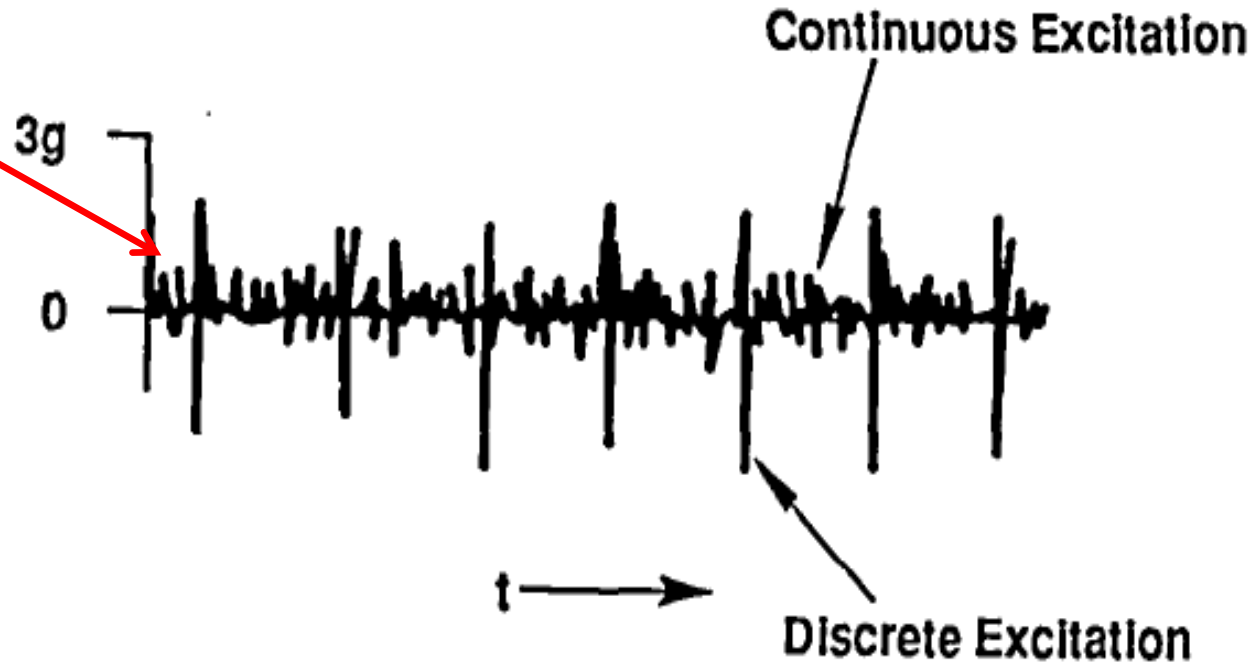

Acceleration-time history shows presence of discrete shock signals superimposed on continuous vibration

Internal vibration loads include transient shocks generated by basket wall & fuel rods & guide tubes & spacer grids interactions

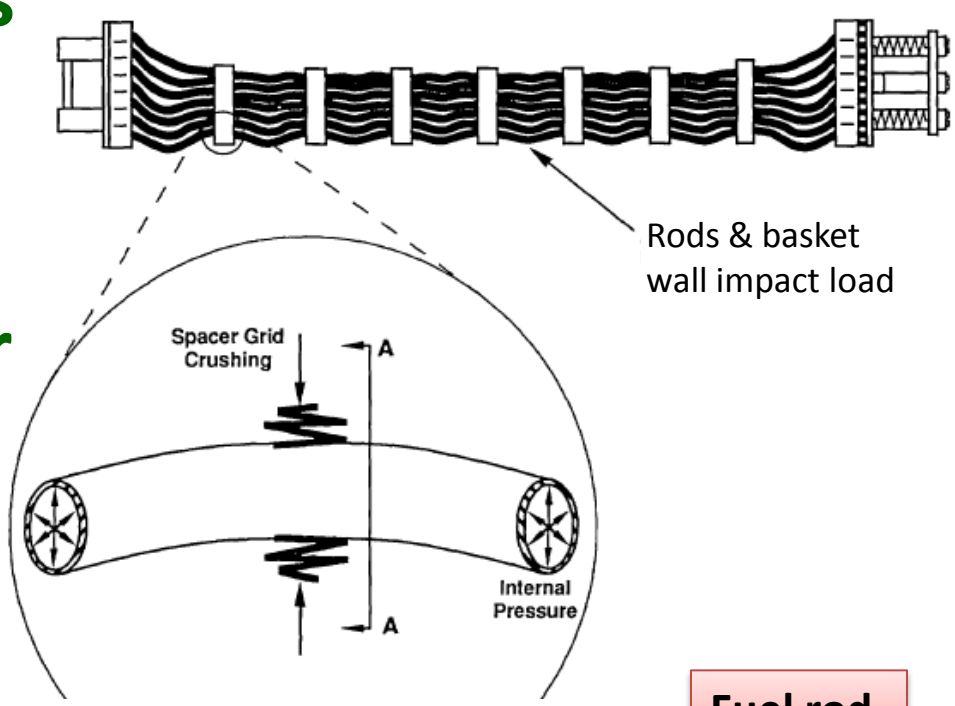

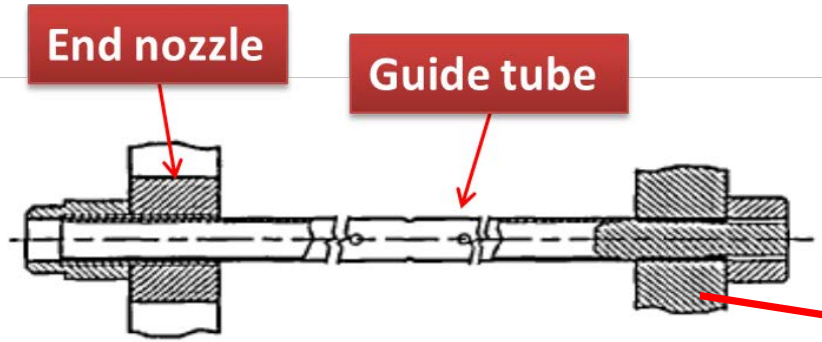

Guide Tube Assembly - Details

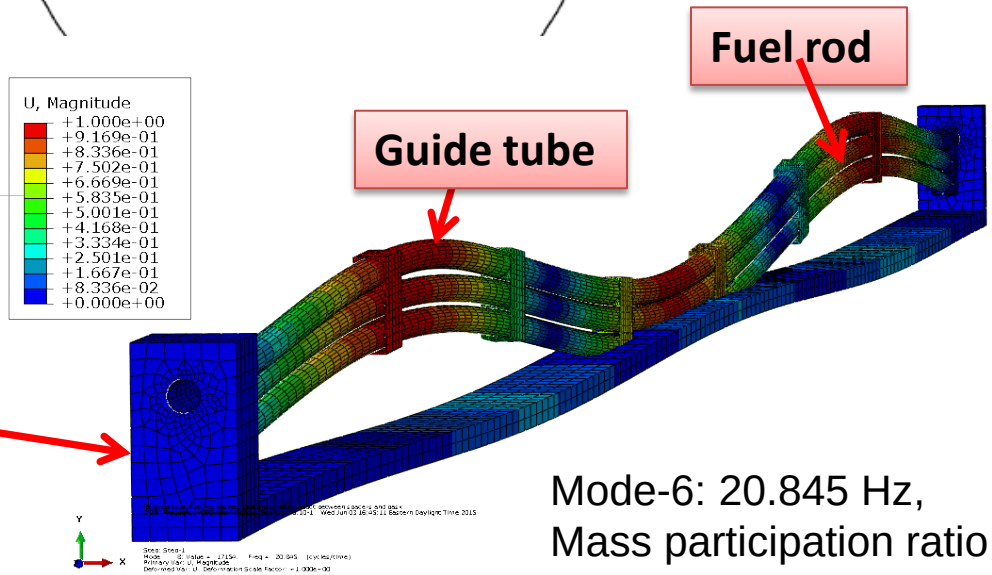

Mode-6: 20.845 Hz, Mass participation ratio 0.236

CIRFT Methodology to determine SNF effective lifetime using SNF vibration time-history data

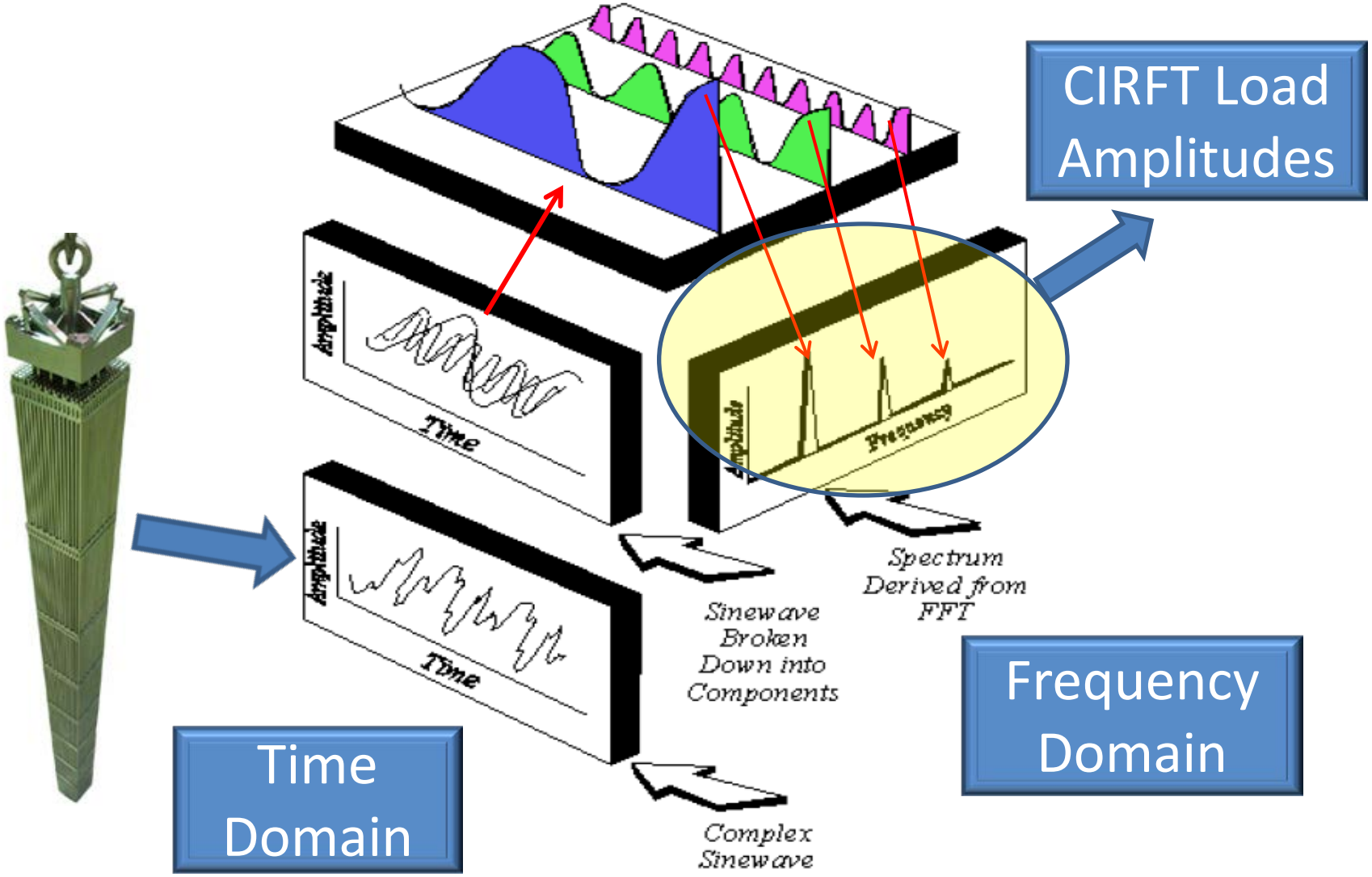

Rail Shock and Vibration Pre-Test Modeling of a Used Nuclear Fuel Assembly - IHLRWM 2015, Charleston, SC, April 12-16, 2015

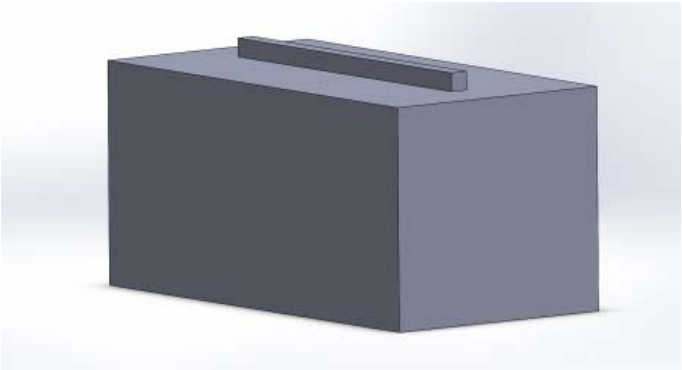

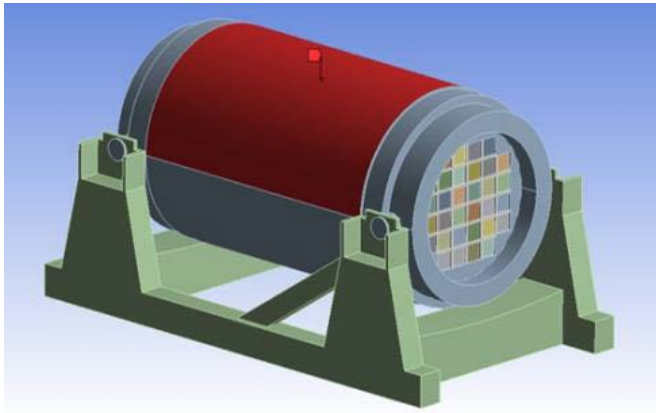

Table 1. Modal Analysis of Concrete Block

Concrete Block System

Mode	Frequency	Ratio
1	144.3	0.0002
2	174.3	0.0000
3	179.0	0.0000
4	285.9	0.0004
5	318.1	1.0000
6	338.2	0.6429
7	347.9	0.0000
8	354.1	0.0000

Table 2. Modal Analysis of Cask/Cradle Systems

Cask/Cradle System

Mode	Frequency	Ratio
1	10.52	0.0004
2	27.72	0.0269
3	28.75	0.0012
4	52.40	1.0000
5	66.76	0.0033
6	73.06	0.0419
7	153.5	0.0503
8	154.2	0.0245

Concrete block model shows significant reduction in amplification factor compared to cradle model for both harmonic vibration and transient shocks

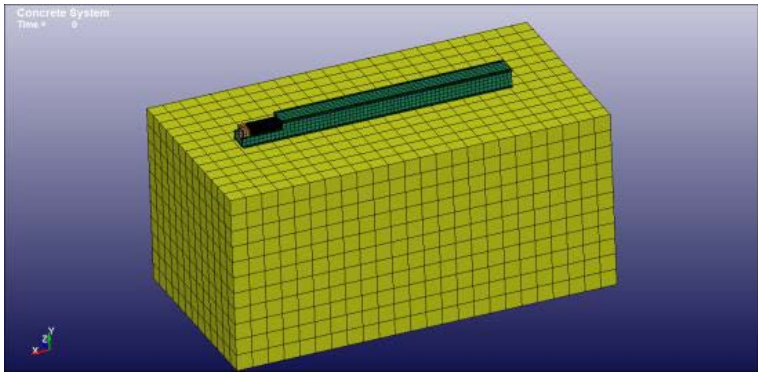

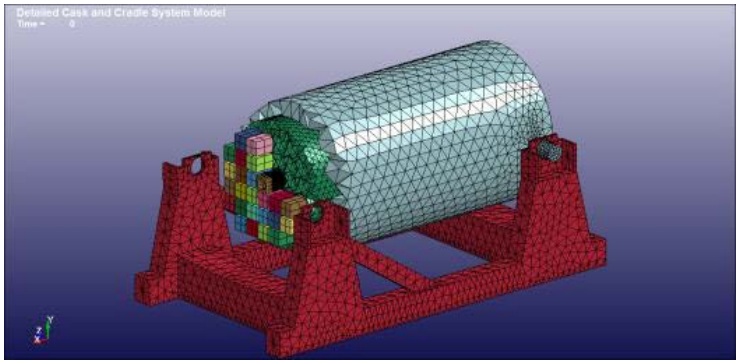

Frequency Response Spectra

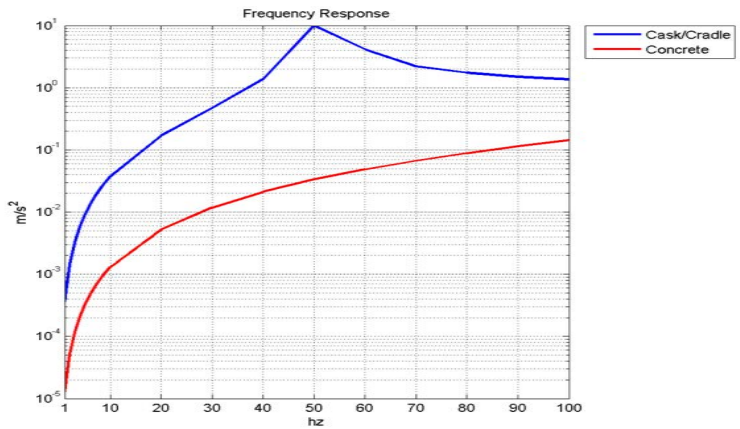

Nonlinear Analysis of Load Transference

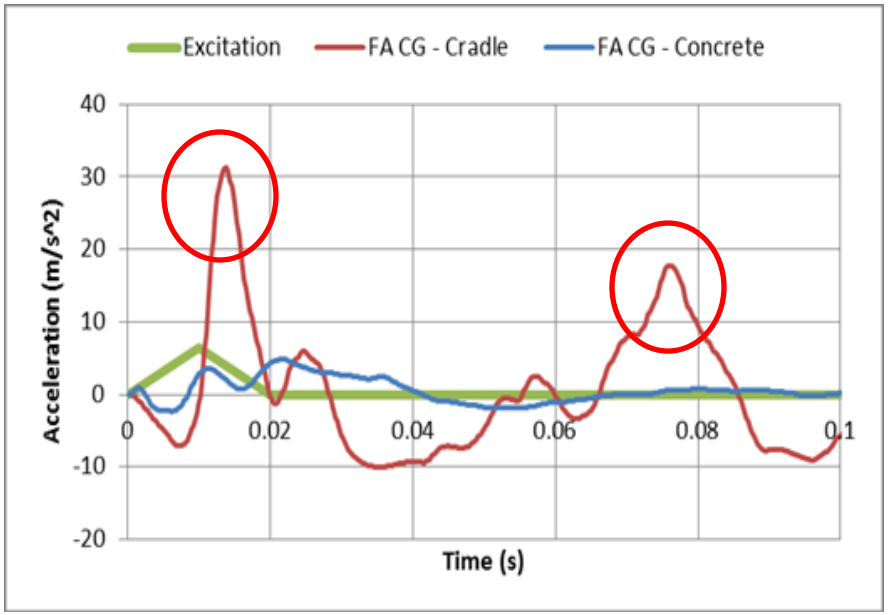

Cradle model shows 10 times amplification factor (AF), concrete mode on the contrary to suppress AF.

Surrogate fuel assembly vibration intensity registered from Sandia truck vibration simulation

FCRD-UFD-2014-000066

Table 5.1 Strain gauge maximum values for truck test

Strain Gauge	Location on Assembly	Maximum Micro-strain Absolute Value (µin./in.)
S3 - 0°	Adjacent to first spacer grid, Span 5	143
S3 - 90°		84
S3 - 225°		108

Table 5.7 Maximum vertical rod accelerations all route segments

All Segments		
Uniaxial Accelerometer	Location	Maximum Acceleration, g
A1	On first spacer grid, Span 10	9.5
A2	Mid-span, Span 10	16.7
A3	Adjacent to second spacer grid, Span 10	14.6
A7	Adjacent to second spacer grid, Span 5	22.0
A8	On second spacer grid, Span 5	11.3

Potential error sources of using resistance strain gage for dynamic deformation measurement

Time and amplitude errors

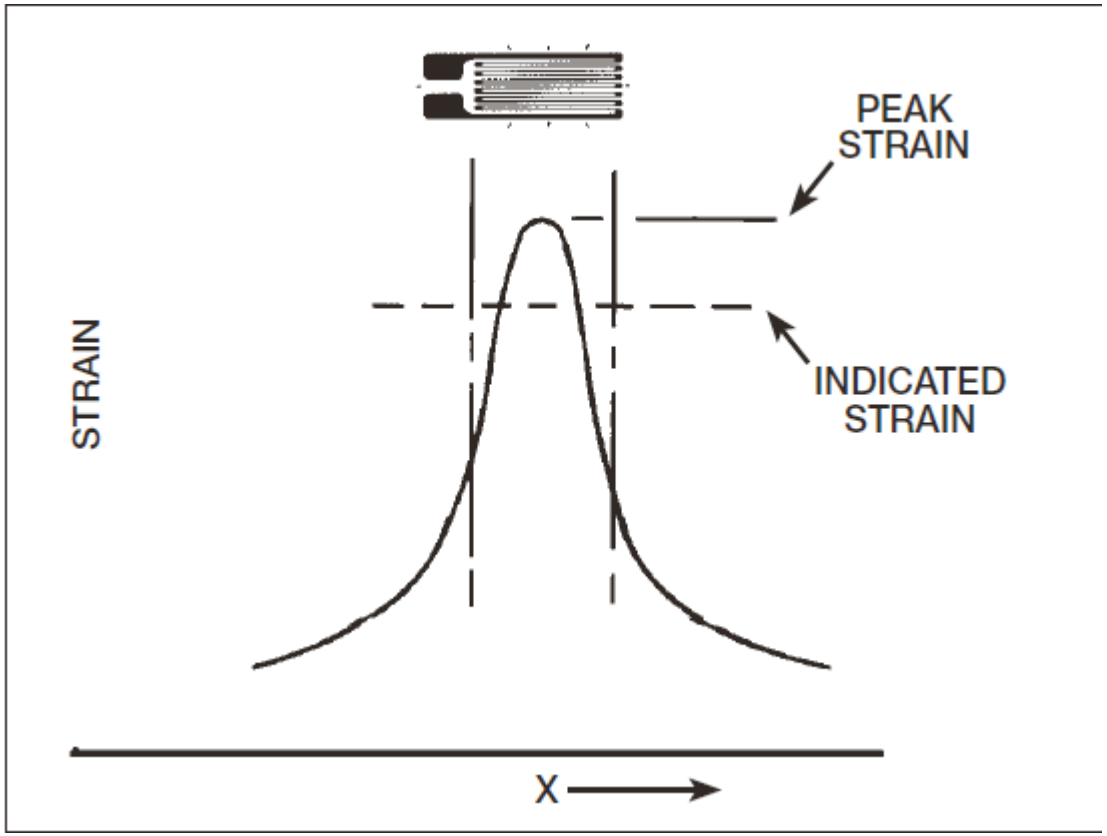

- *Type of gage*
- *Gage length*
- *Temperature*
- *Lead wire effect*
- *Shielding of leads*
- *Solider joining*
- *Gage bonding*
- *Amplifiers (rise-time, amplitude, random vibration)*

ORNL local SNF modelling

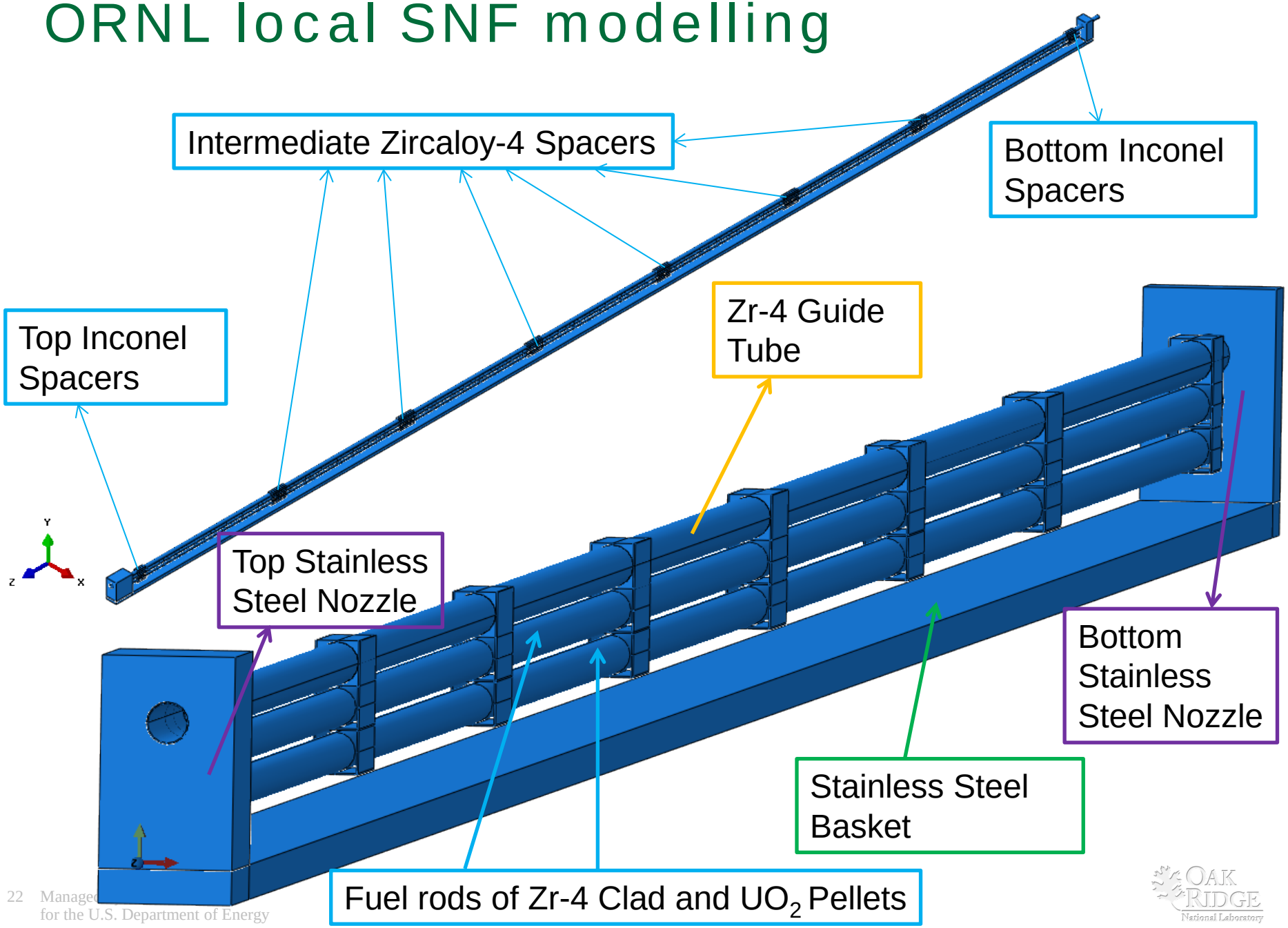

Rod and Fuel skeleton interactions

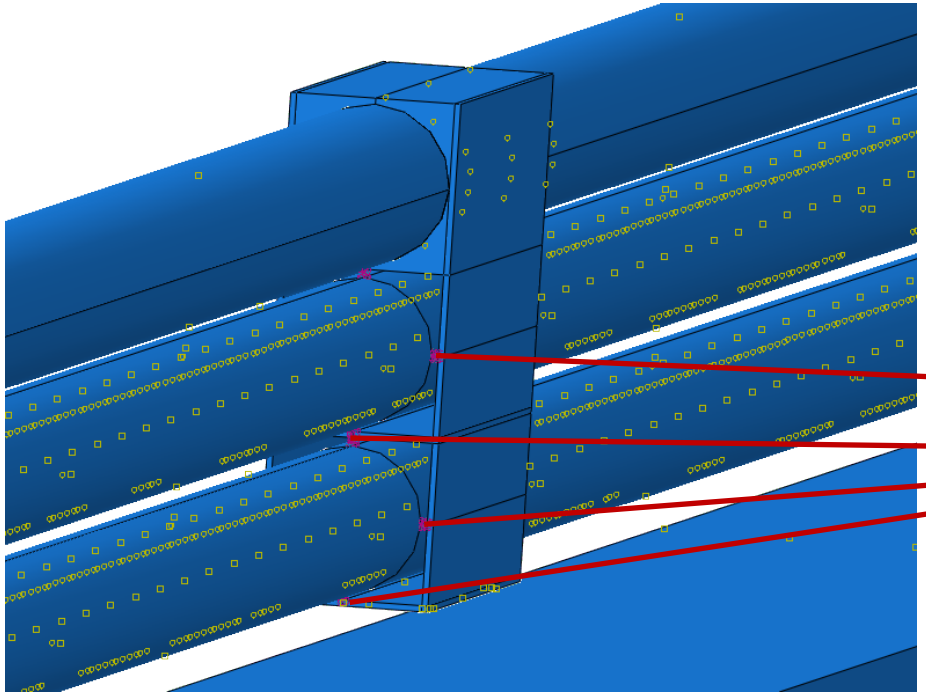

Guide tube outer surface, clad outer surfaces, spacers bottom surfaces and basket top surface contact if touch

Spacers connect fuel rods with two Zr-4 springs and two Zr-4 dimples

Zr-4 Spring

Zr-4 Dimple

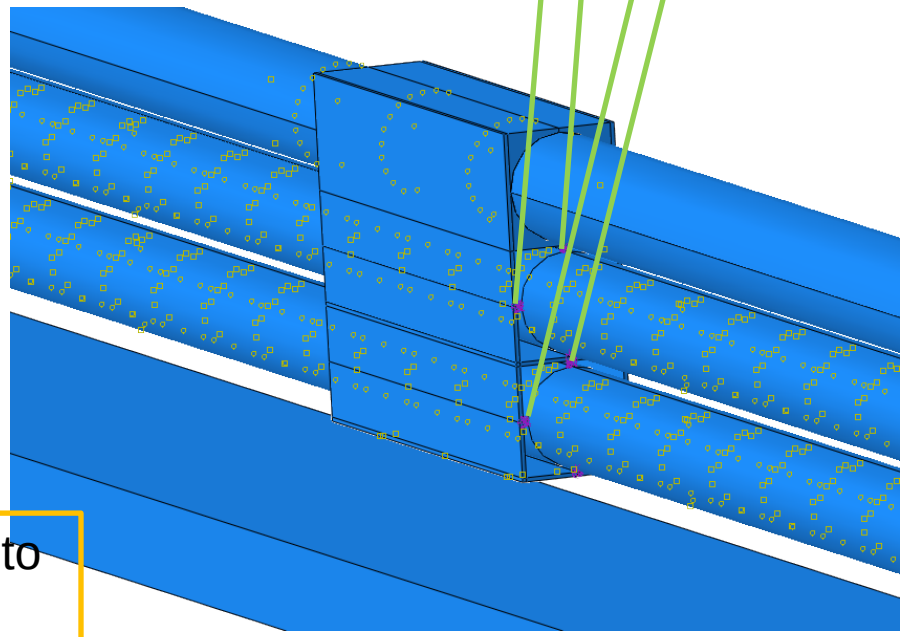

Guide tube ties to nozzles and spacers

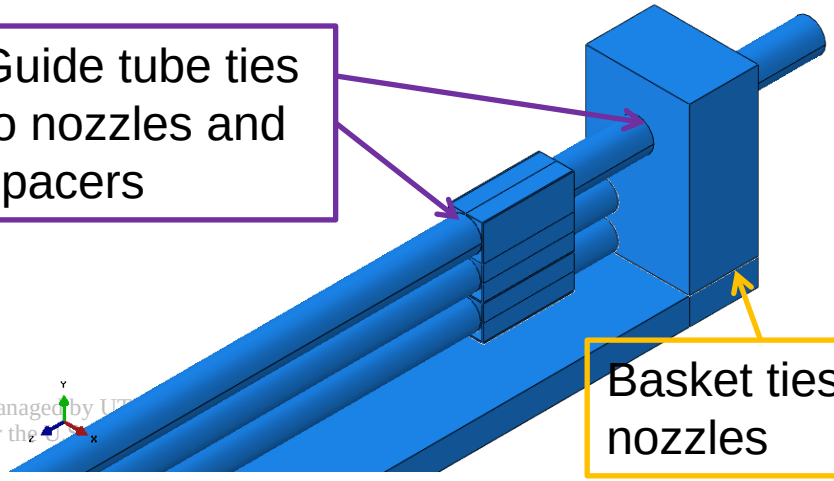

Basket ties to nozzles

ORNL modal analysis show low natural frequency compared to cradle & concrete models

	Mode No.	Frequency	Participation Factor in vertical direction	Effective Mass in vertical direction (lbf s²/in)
sub-model →	1	2.4439	1.000	8.195E-02
	2	2.7325	0.162	2.870E-03
	3	5.8257	0.004	1.246E-06
	4	9.5519	0.004	6.399E-07
	5	14.792	0.381	1.079E-02
	6	20.845	0.236	2.525E-03
	7	22.665	0.011	1.037E-05
	8	36.11	0.076	2.857E-04
	9	37.702	0.221	3.965E-03
	10	50.287	0.026	5.776E-05
cradle →	11	55.525	0.182	1.419E-03
	12	70.983	0.163	1.865E-03
	13	75.871	0.001	6.431E-09
	14	76.498	0.063	8.095E-05
	15	90.103	0.026	4.378E-05
	16	92.62	0.000	4.972E-10
	17	93.064	0.000	4.257E-11
	18	94.273	0.000	4.901E-10
	…			
concrete →	49	318.29	0.001	6.104E-09
	51	345.44	0.014	6.133E-07

Modal Analysis--Mode and Frequency

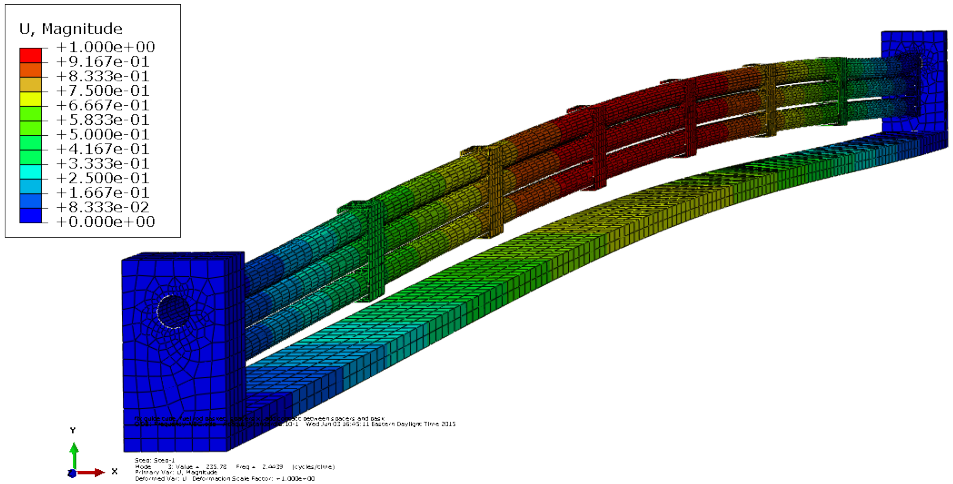

Mode-1: 2.4439 Hz

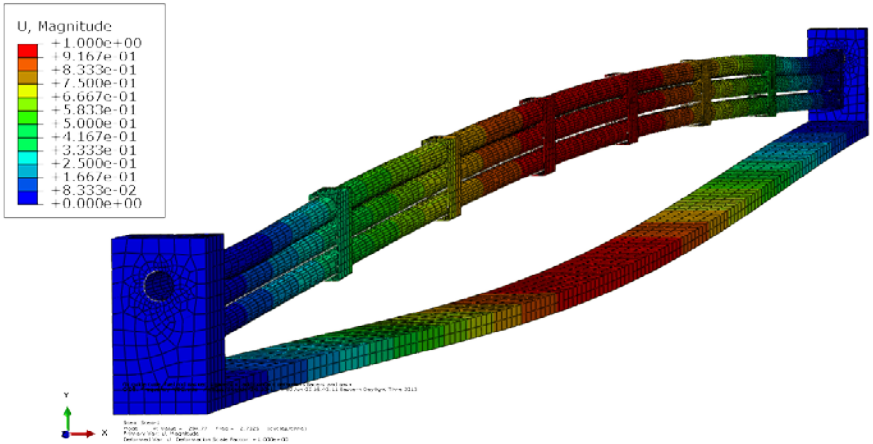

Mode-2: 2.7325 Hz

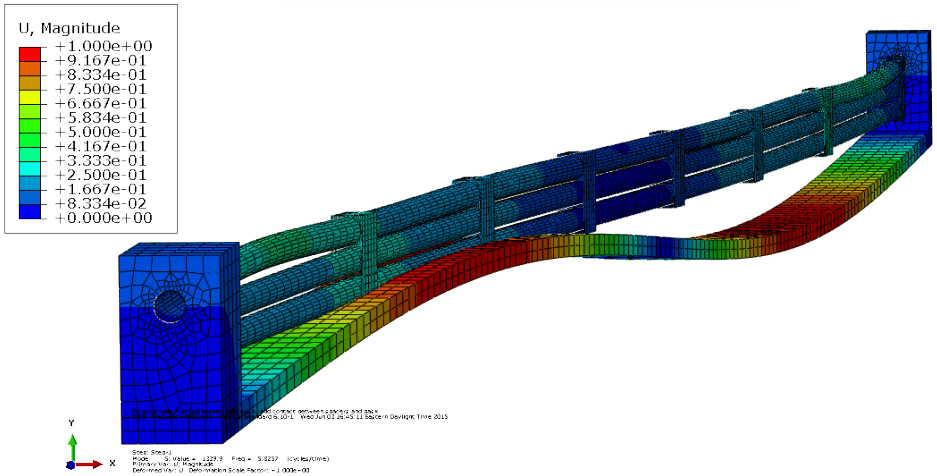

Mode-3: 5.8257 Hz

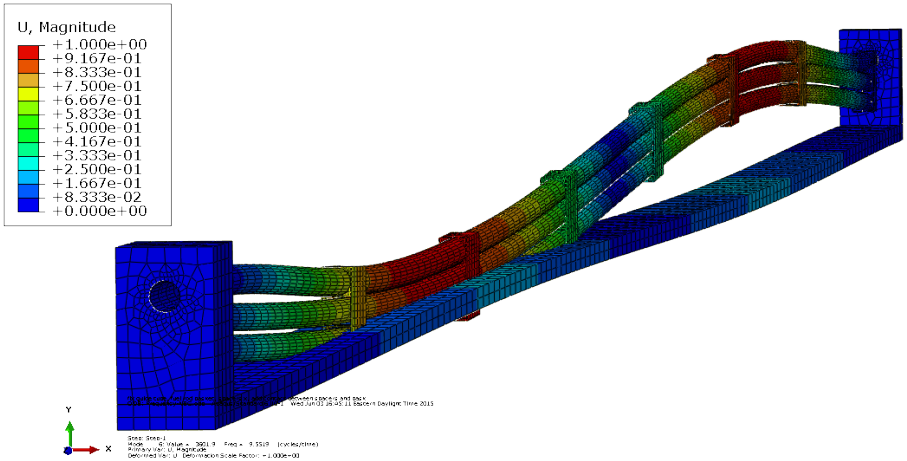

Mode-4: 9.5519 Hz

Modal Analysis--Mode and Frequency Cont.

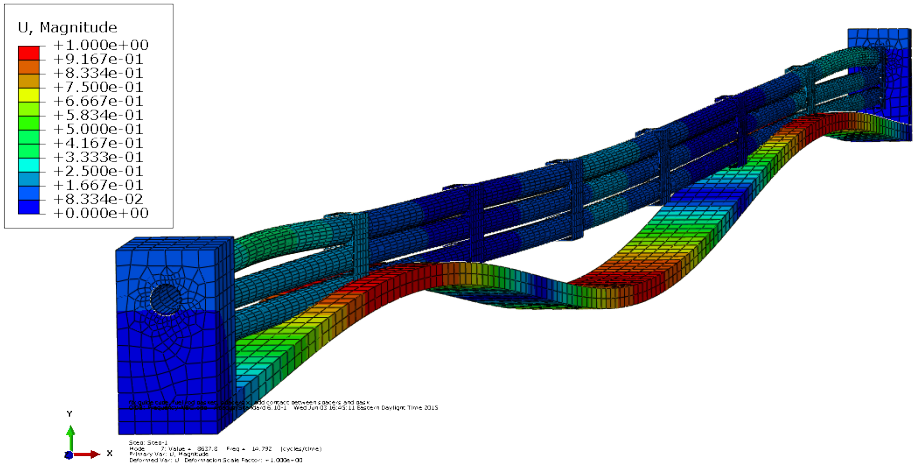

Mode-5: 14.792 Hz

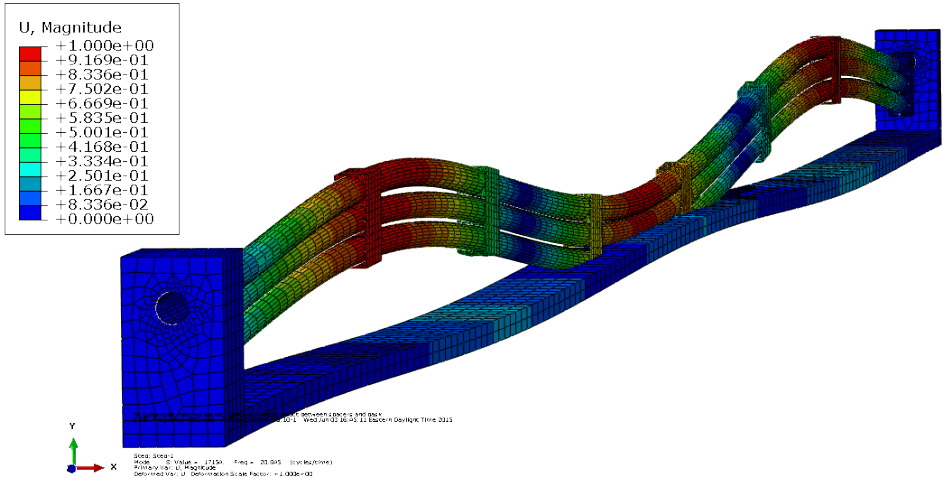

Mode-6: 20.845 Hz

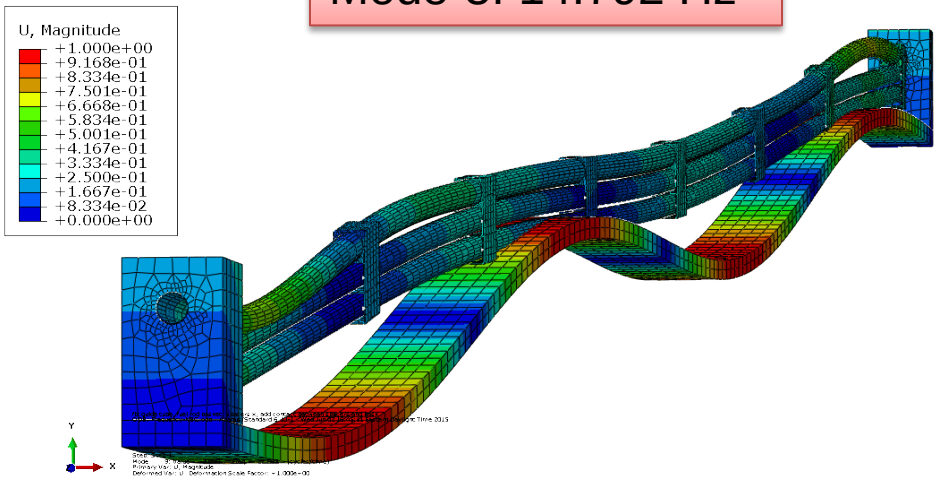

Mode-7: 22.665 Hz

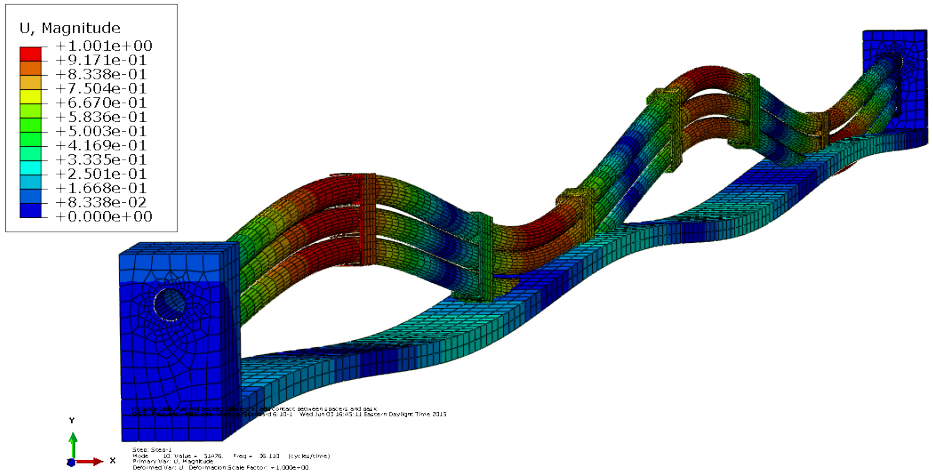

Mode-8: 36.11 Hz

Load and Boundary- Case 1

Step-1: Gravity for guide tube and two fuel rods down in vertical Y direction; the other eight fuel rod weights applied as concentrated loads evenly on the guide tube at eight spacer location as P load; basket simply supported.

P=4.94 lb

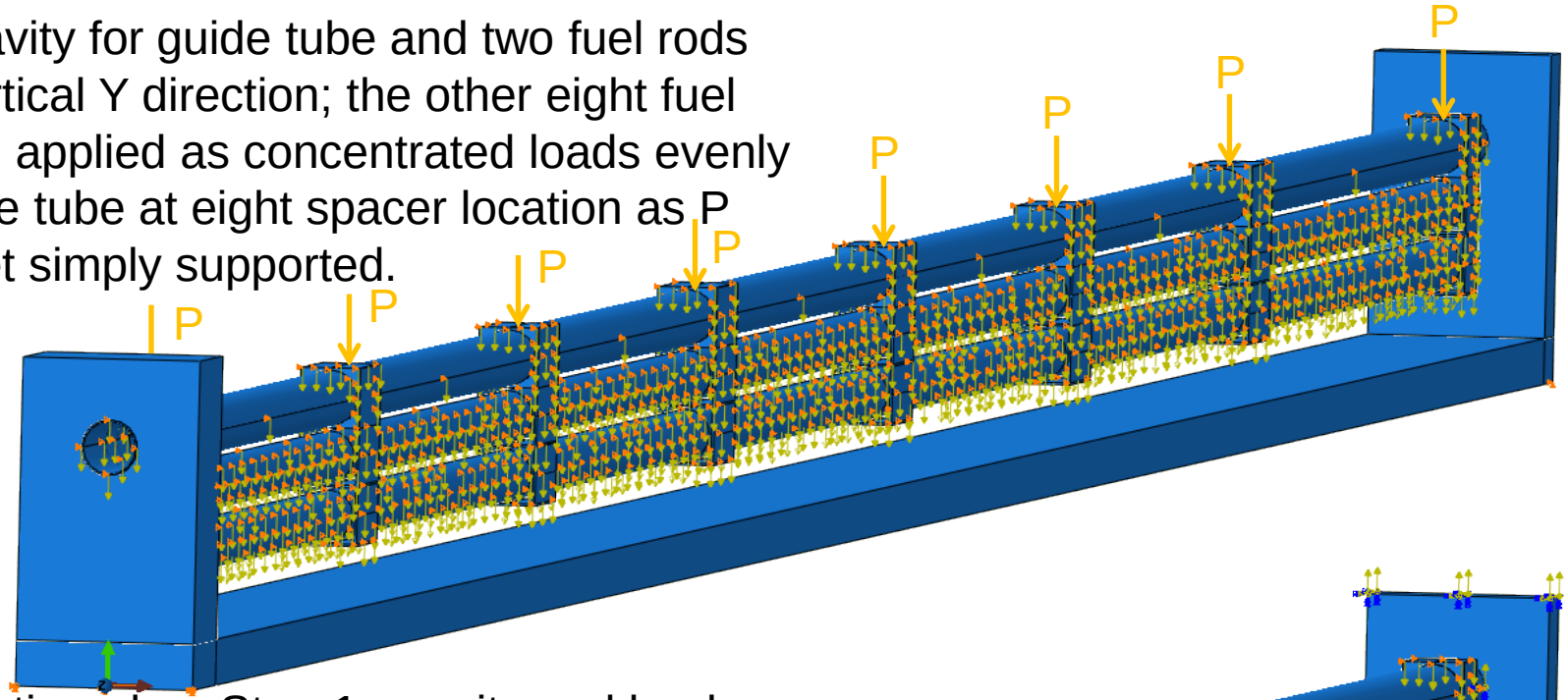

Step-2: Continued on Step-1, gravity and loads same as step-1; remove basket simple support boundary, apply 0.5g sine wave acceleration on basket and nozzles.

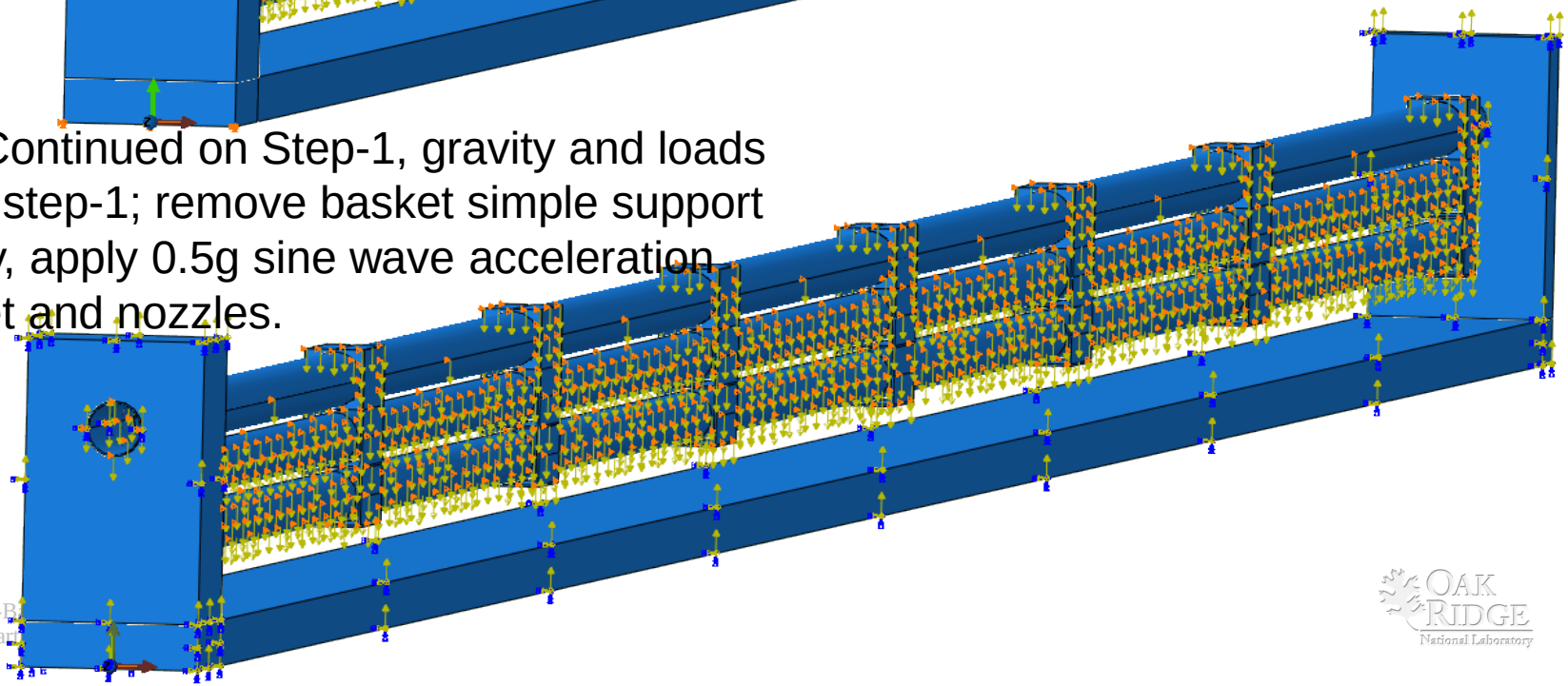

Step-1: Under Gravity Loads

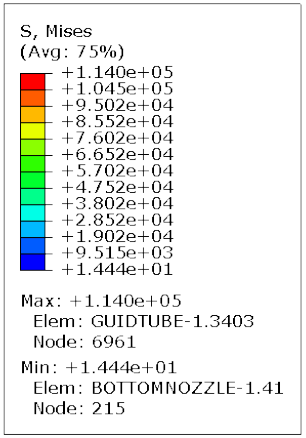

Guide tube and fuel rods sag in the middle; Max stress on guide tube, no yielding

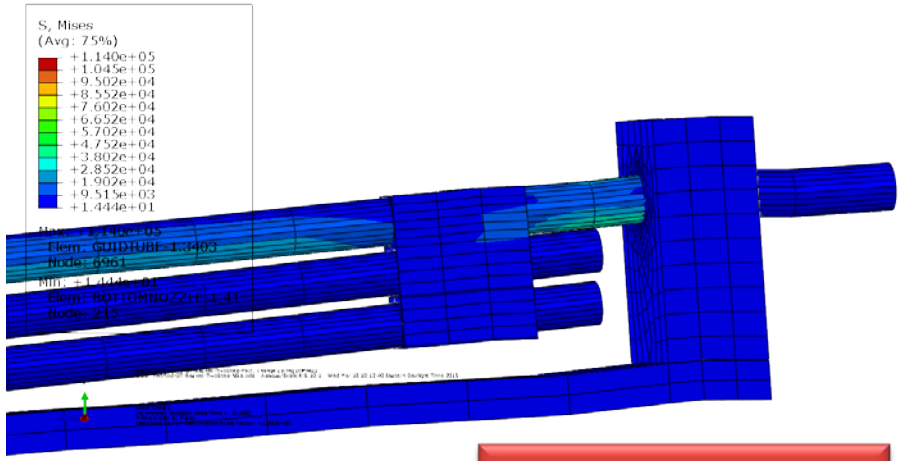

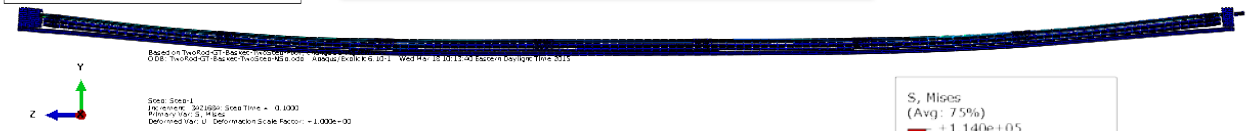

Bottom spacer doesn't contact basket

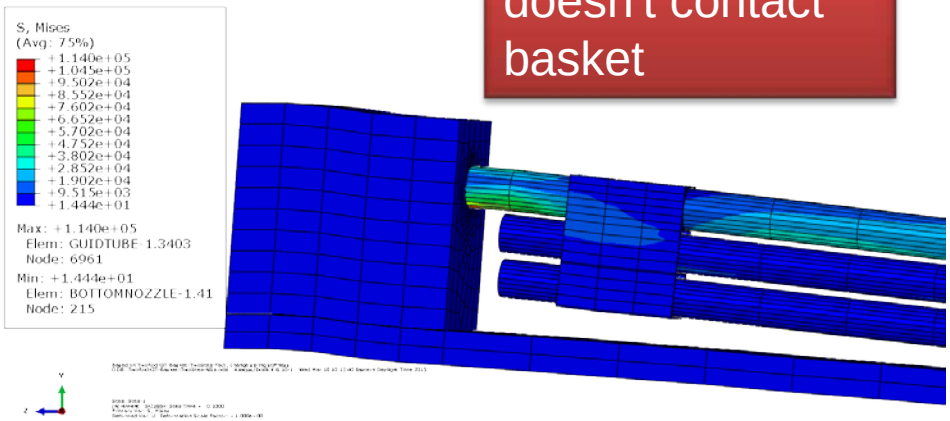

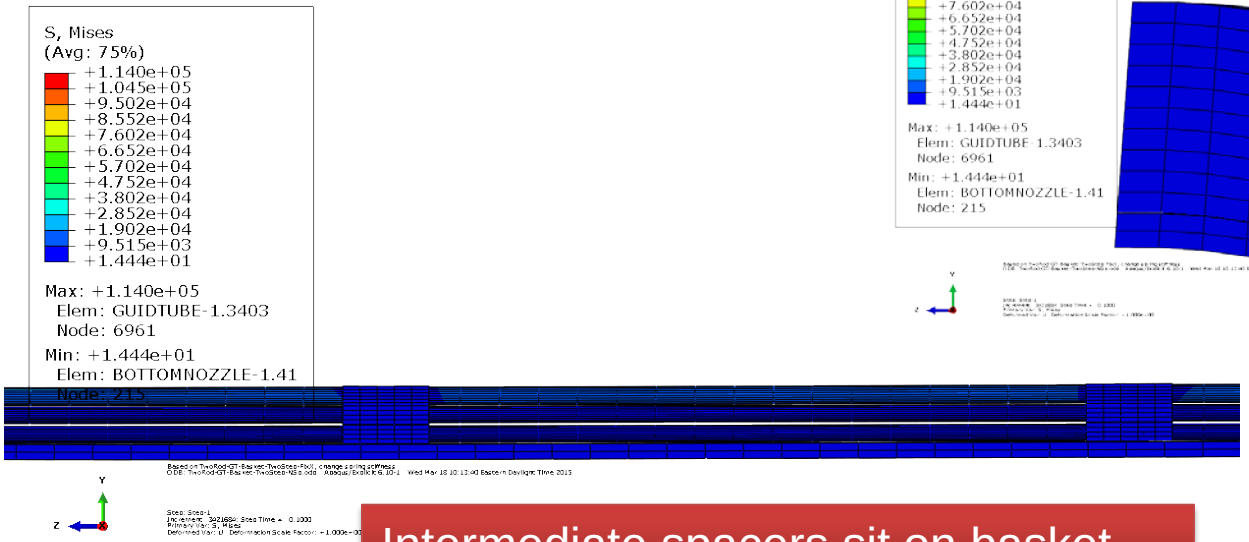

Top spacer doesn't contact basket

Intermediate spacers sit on basket

Step-2: Acceleration 0.5g Sine Wave and Gravity Loads

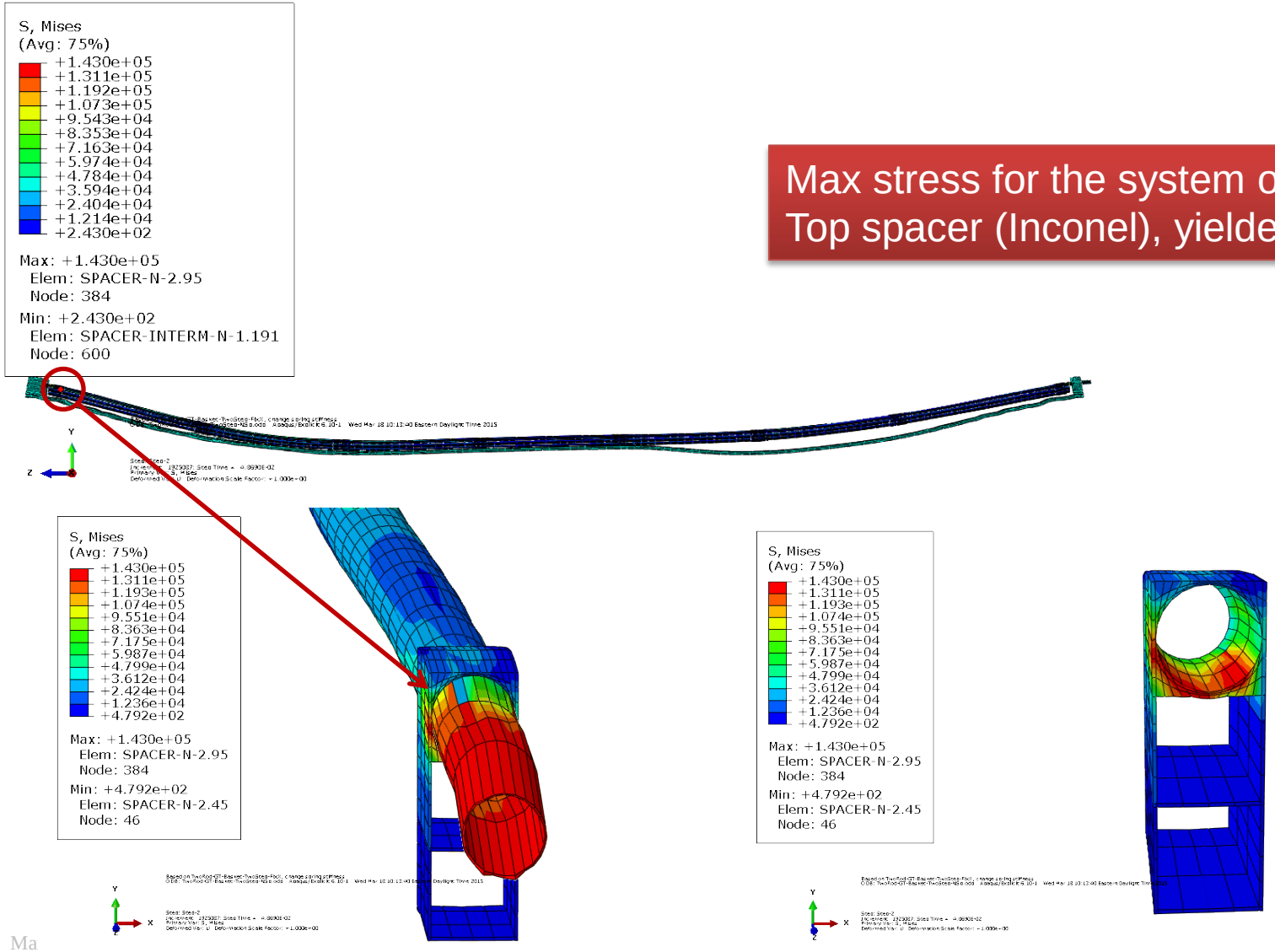

Max stress for the system on the Top spacer (Inconel), yielded

Step-2: Guide Tube Response on 0.5g Acceleration and Gravity Loads

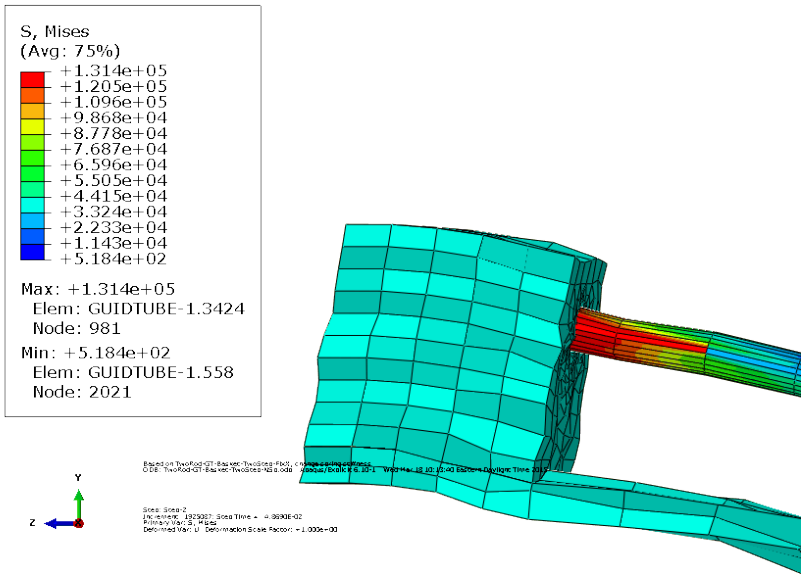

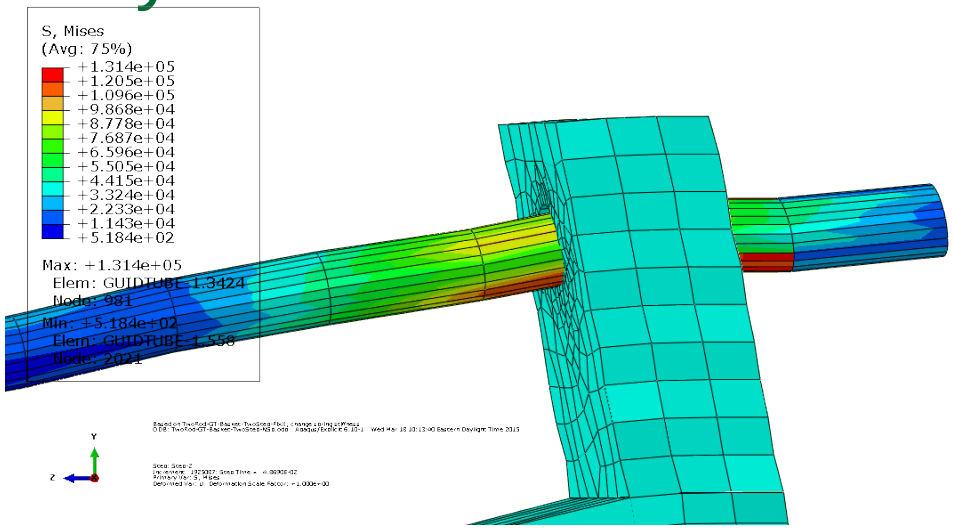

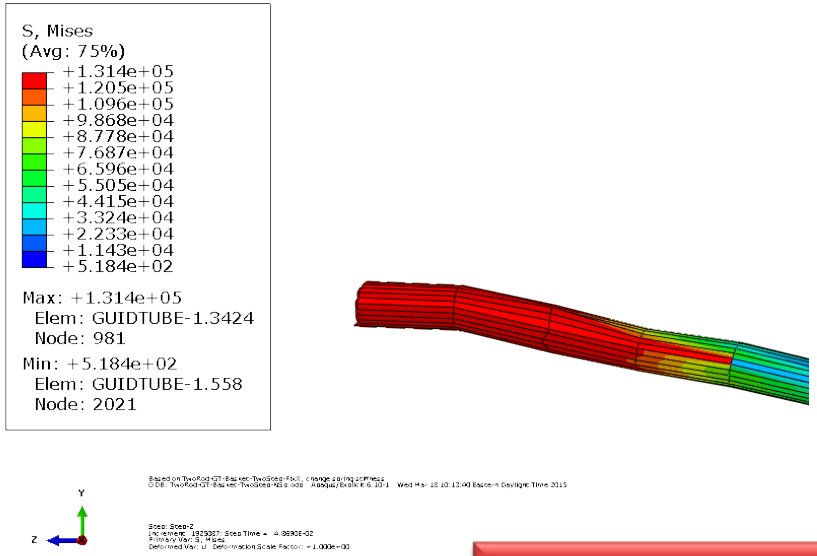

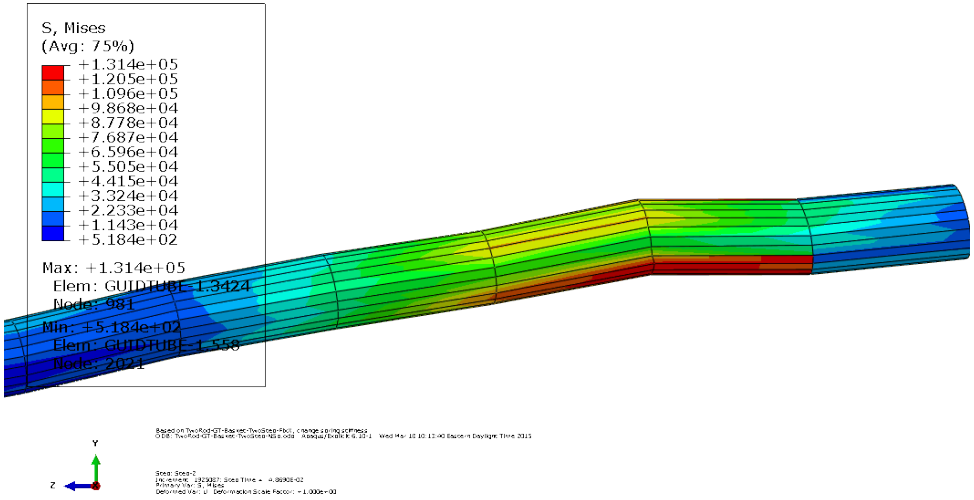

Guide tube yielded at top and bottom nozzle location

Step-2:Clad, Basket and Nozzles Response

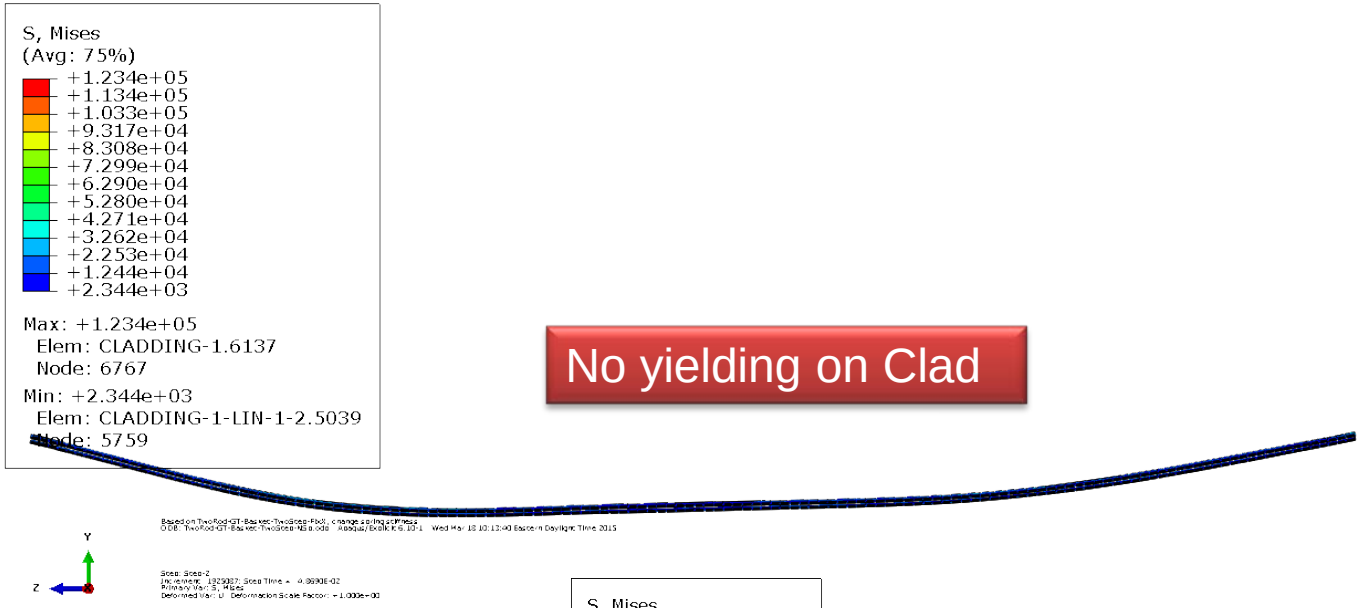

No yielding on Clad

Basket and nozzles yielded

SNF system failure mechanisms should includes skeleton aging behaviors

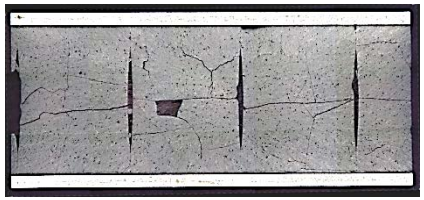

Thick oxide region has higher Δa and will higher stress intensity, Kc = $\sigma\sqrt{\pi a}$

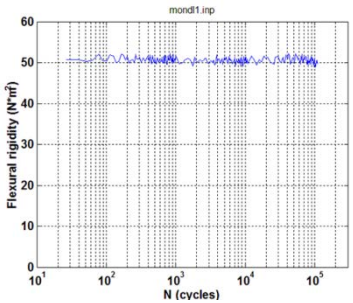

Hydride ring region has higher stiffness, when hydride ring was breached due to cyclic fatigue, fast brittle fracture was initiated.

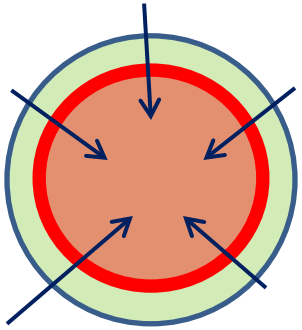

Clad residual stress constraint to the fuel increase the system rigidity

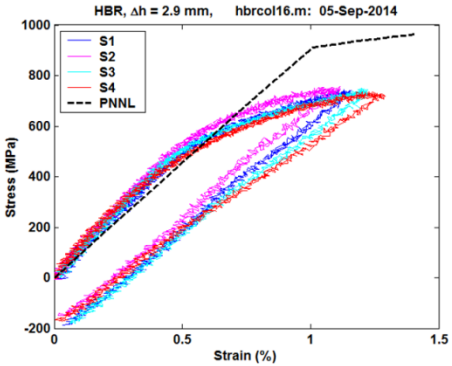

Diff. may result from lack of consideration of clad axial and radial residual stress; and SCF at P-P & oxide-clad interface

Backup slides

CIRFT S-N trend show two different damage rates and the cut-off range is near 10 N-m

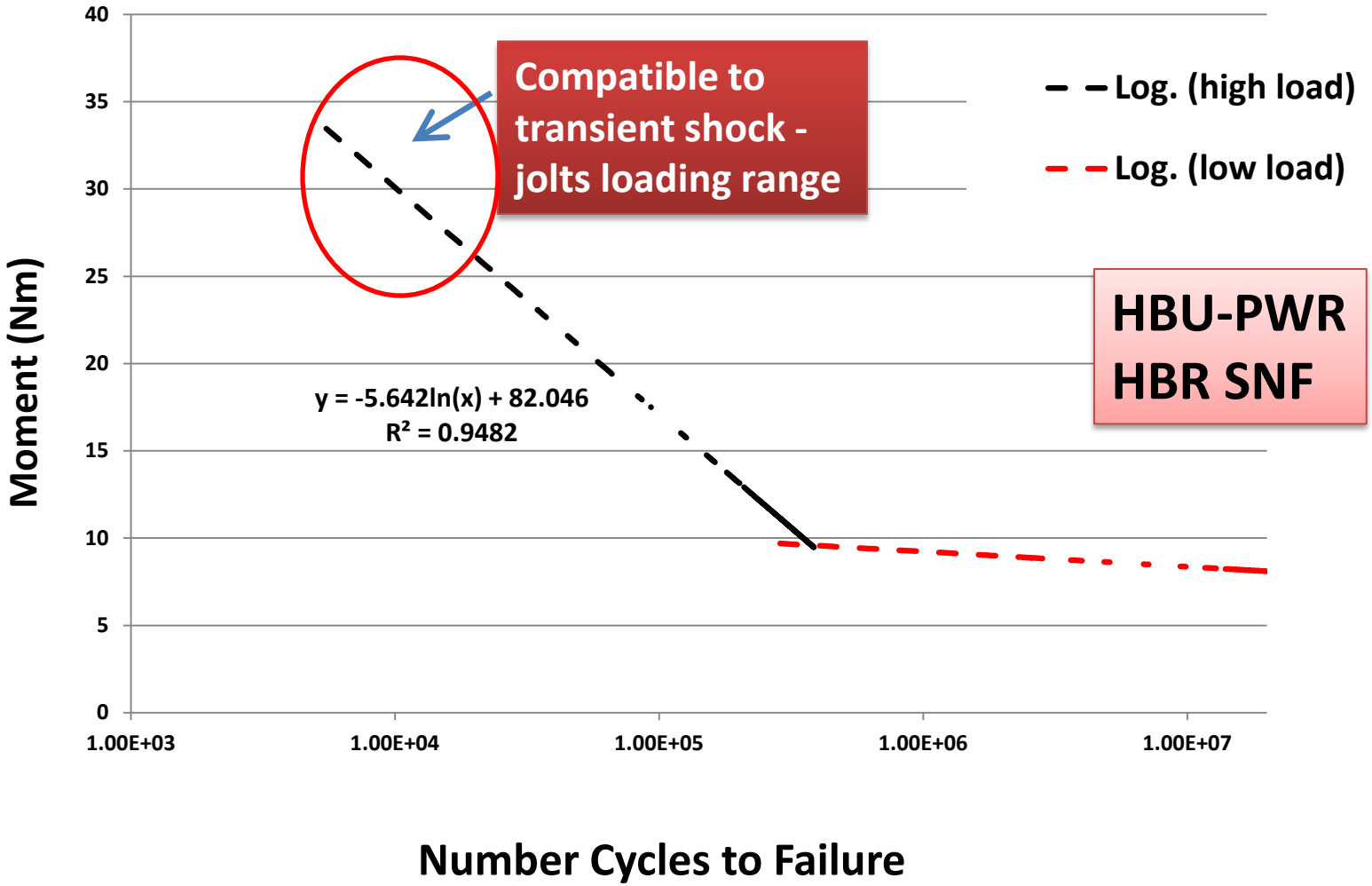
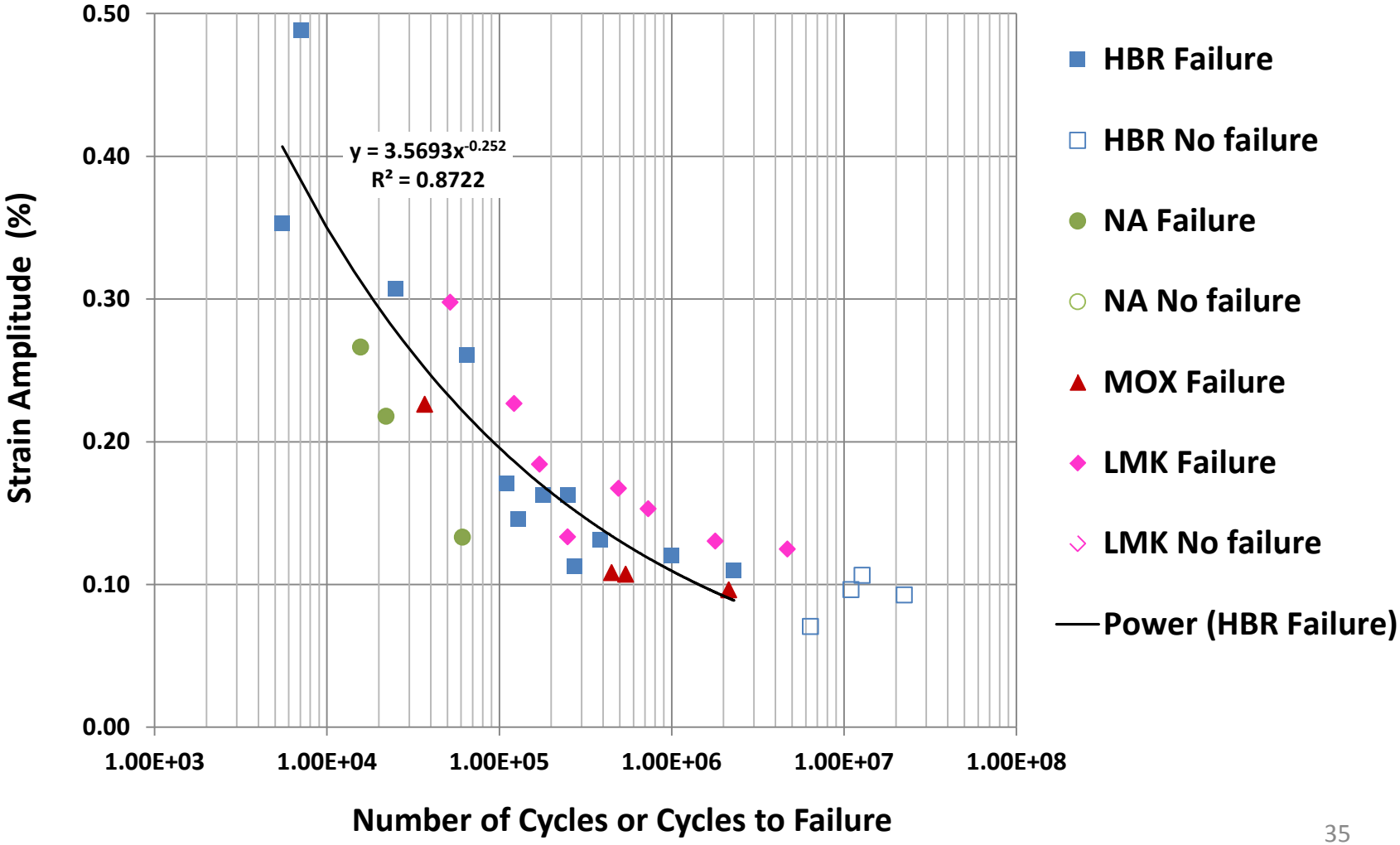
Strain vs. failure lifetime data shows significantly reduction in data scatter