SANDIA REPORT
SAND2013-5916
Unlimited Release
Printed July 2013

Series and Parallel Arc-Fault Circuit Interrupter Tests

Jay Johnson, boB Gudgel, Andrew Meares, and Armando Fresquez

Prepared by
Sandia National Laboratories
Albuquerque, New Mexico 87185 and Livermore, California 94550

Sandia National Laboratories is a multi-program laboratory managed and operated by Sandia Corporation, a wholly owned subsidiary of Lockheed Martin Corporation, for the U.S. Department of Energy's National Nuclear Security Administration under contract DE-AC04-94AL85000.

Sandia National Laboratories

Issued by Sandia National Laboratories, operated for the United ***S***tates Department of Energy by Sandia Corporation.

Printed in the United States of America. This report has been reproduced directly from the best available copy.

Available to DOE and DOE contractors from
U.S. Department of Energy
Office of Scientific and Technical Information
P.O. Box 62
Oak Ridge, TN 37831

Telephone: (865) 576-8401
Facsimile: (865) 576-5728
E-Mail: reports@adonis.osti.gov
Online ordering: http://www.osti.gov/bridge

Available to the public from
U.S. Department of Commerce
National Technical Information Service
5285 Port Royal Rd.
Springfield, VA 22161

Telephone: (800) 553-6847
Facsimile: (703) 605-6900
E-Mail: orders@ntis.fedworld.gov
Online order: http://www.ntis.gov/help/ordermethods.asp?loc=7-4-0#online

SAND2013-5916
Unlimited Release
Printed July 2013

Series and Parallel Arc-Fault Circuit Interrupter Tests

Jay Johnson and Armando Fresquez
Sandia National Laboratories
P.O. Box 5800
Albuquerque, New Mexico 87185-0352

boB Gudgel and Andrew Meares
MidNite Solar
17722 - 67th Ave NE
Arlington, WA 98223

Abstract

While the 2011 *National Electrical Code*® (*NEC*) only requires series arc-fault protection, some arc-fault circuit interrupter (AFCI) manufacturers are designing products to detect and mitigate both series and parallel arc-faults. Sandia National Laboratories (SNL) has extensively investigated the electrical differences of series and parallel arc-faults and has offered possible classification and mitigation solutions. As part of this effort, Sandia National Laboratories has collaborated with MidNite Solar to create and test a 24-string combiner box with an AFCI which detects, differentiates, and de-energizes series and parallel arc-faults. In the case of the MidNite AFCI prototype, series arc-faults are mitigated by opening the PV strings, whereas parallel arc-faults are mitigated by shorting the array. A range of different experimental series and parallel arc-fault tests with the MidNite combiner box were performed at the Distributed Energy Technologies Laboratory (DETL) at SNL in Albuquerque, NM. In all the tests, the prototype de-energized the arc-faults in the time period required by the arc-fault circuit interrupt testing standard, UL 1699B. The experimental tests confirm series and parallel arc-faults can be successfully mitigated with a combiner box-integrated solution.

ACKNOWLEDGMENTS

This work was funded by the U.S. Department of Energy Solar Energy Technologies Program and Office of Electricity Energy Storage Program.

CONTENTS

FIGURES

TABLES

NOMENCLATURE

AC	alternating current
AFCI	arc-fault circuit interrupter
CT	current transformer
DC	direct current
DETL	Distributed Energy Technologies Laboratory
GFDI	ground fault detection/interruption
Hz	hertz
I-V curve	current-voltage curve of a PV module or string
kW	kilowatt
MPP	maximum power point
NEC	*National Electrical Code®*
OCPD	overcurrent protection device
PV	photovoltaic
SNL	Sandia National Laboratories
UL	Underwriters Laboratories
V_{OC}	open circuit voltage

This page is intentionally left blank.

1. INTRODUCTION

Extensive testing of arc-fault detector functionality and nuisance tripping issues has been performed at Sandia National Laboratories over the last three years [1-5]. As part of this work, the DC electrical arc-fault noise signatures of series and parallel arc-faults were measured and quantified [1-2]. Many arc-fault circuit interrupters (AFCIs), such as the MidNite design, rely on time or frequency analysis of the DC current to determine when there is an arc-fault on the PV system. Unfortunately, there is little difference between series and parallel arc-faults in noise signatures or electrical behavior of the array [2, 6]. Therefore, if the mitigation measures taken by the AFCI are different for series and parallel arc-faults, there is a need to differentiate the two arc types. Series arc-faults can be de-energized by opening the conduction path through the arc-fault at any location or locations, but parallel arc-faults are more challenging to mitigate. Mitigating parallel arc-faults can be done by:

1. Opening the connectors between each module [2]. This requires module-level electronics or communication links to switches in the field. One limitation is that this approach may not extinguish parallel arc-faults inside single modules.
2. Shorting the string/array [7-9]. This de-energizes the parallel arc-fault by dropping the voltage across the arc gap to zero. Unfortunately this approach will put high currents through the array until the array is shaded or the sun sets, at which point maintenance personnel can repair the system safely.

In parallel arc-fault mitigation option 1 above, both series and parallel arc-faults will be extinguished (as long as the parallel arc-fault is not in a single module [2]), so there is no need to differentiate the two arc-fault types. However, if there are no module-level switches in the PV system, differentiation of the two arc-fault types is desired so that the proper corrective action (opening or shorting) is taken. Technically, the AFCI could open and short the array for all arc-faults, but leaving the array in a shorted condition is more dangerous for shock and fire hazards, so it is recommended that this solution is avoided where possible. Thus, AFCI manufacturers installing systems at the combiner box or inverter use additional techniques to differentiate series and parallel arc-faults. Options for differentiating these fault types are discussed in [2, 7-9] and include:

1. Monitoring voltage or current change when the arc-fault occurs.
2. Forcing the string toward V_{OC} to de-energize the series arc-fault, then recheck for parallel arc-fault noise.
3. Opening the arcing string/array and rechecking for parallel arc-fault noise.

In the case of the MidNite Solar AFCI combiner box, the prototype first opens the PV DC disconnect to stop the series arc-fault and then, if there still is arc-fault noise on the system, it shorts the PV strings to mitigate the parallel arc-fault. This is a robust solution that extinguishes all arc-faults and does not require measurements of the current or voltage, or any adjustment of the operating point on the I-V curve.

MidNite Solar and Sandia National Laboratories performed joint testing of a combiner box with series and parallel arc-fault protection at the Distributed Energy Technologies Laboratory.

Series arc-faults and parallel arc-faults were created on a two-string 2.8 kW array with a 5.0 kW inverter. The trip times for the prototype were recorded for arc-faults to verify the device complied with the Underwriters Laboratories (UL) AFCI product testing standard, UL 1699B. In all arc-fault tests, the combiner box mitigated the fault in the time allotted by the UL standard.

2. MIDNITE SOLAR COMBINER BOX DESIGN

Sandia National Laboratories collaborated with MidNite Solar to identify a range of technical challenges associated with de-energizing both series and parallel arc-faults. Series arc-fault mitigation procedures are straight forward—opening the DC disconnect extinguishes all the series arcs in the DC system. Parallel arc-faults on the other hand are more complicated, especially when shorting the PV system. MidNite Solar has included a number of unique features in their arc-fault circuit interrupter-integrated combiner box to overcome these technical barriers:

- **Challenge 1**: When shorting the positive and negative buses in the combiner box, the DC bus capacitor of the inverter is also shorted, which causes a large inrush of current and can damage the inverter capacitor, AFCI DC switch, or other components.

  Solution 1: MidNite Solar designed the combiner box to always open the disconnect on the output circuit before shorting the array so that the capacitor is never shorted.

- **Challenge 2**: During a parallel arc-fault, there is the potential for backfed currents in the faulted string to be large enough to trip the overcurrent protection device (OCPD) on that string. At that point, the string or array cannot be shorted to de-energize the arc-fault.

  Solution 2: MidNite Solar solves this problem by shorting the PV strings on the PV side of the OCPD devices.

- **Challenge 3**: Regardless of the OCPD fuse clearing during a parallel arc-fault, when the series switch is opened there is no longer a circuit for the arc-fault noise to reach the current transformers (CTs) on each of the strings.

  Solution 3: MidNite Solar designed a high frequency bridge across the positive and negative strings so the CTs still receive the high frequency noise when the series switch is opened.

With these challenges solved, a 24-string combiner box, shown in Figure 1, was retrofitted with parallel arc-fault detection circuitry. The schematic of the electrical and communications connections inside the combiner box is shown in Figure 2.

Figure 1: 24-String MidNite Solar combiner box with string level monitoring that was retrofitted to detect and mitigate series and parallel arc-faults.

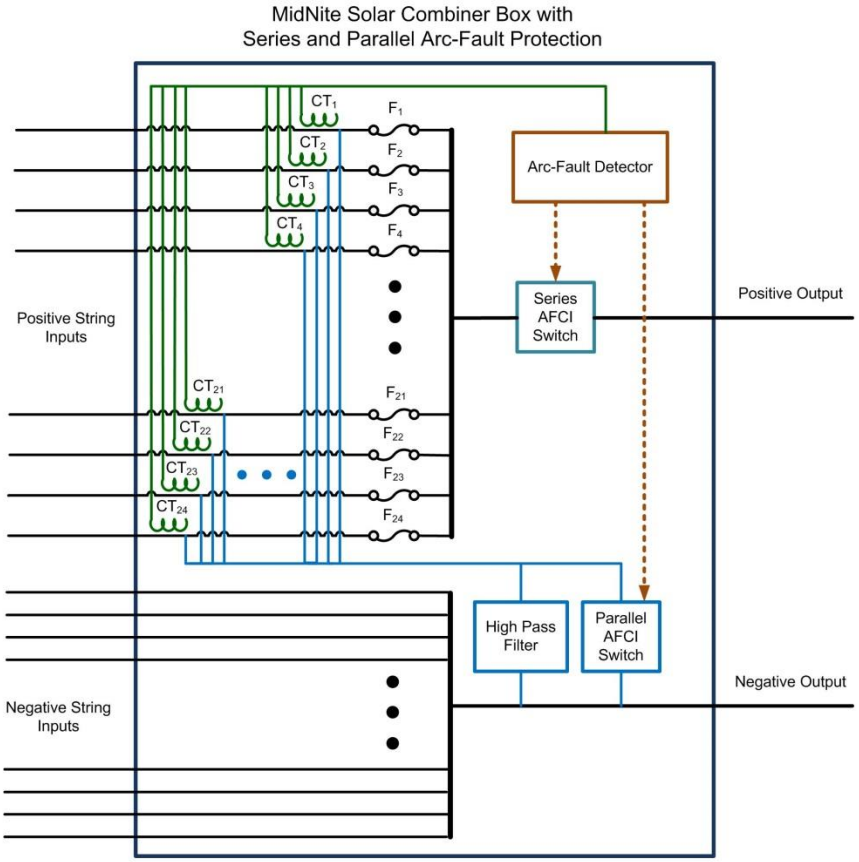

Figure 2: Schematic of the electrical and communications connections in the AFCI combiner box.

3. ARC-FAULT TESTS

A PV system consisting of two strings of seven 200 W monocrystalline Si PV modules connected to a 5 kW single-phase inverter was used to test the AFCI combiner box. The arc-fault generator was installed in series and parallel to test the combiner box's functionality for series and parallel arc-faults.

3.1 Series arc-fault tests

Series arc-fault tests were conducted at DETL with the arc current measured with a Tektronix TCP303 clamp-on CT and the arc voltage measured with a Tektronix P5200. These data were collected at a sampling rate of 25 kHz with a Tektronics DPO3014 oscilloscope. The arc current and voltage were recorded to determine the arc-fault power and trip time. Series arc faults create similar arcing noise regardless of their location in the string [1], so the series arc-faults were generated at an arbitrary position (positive side of Module 6 in one of the strings) as shown in Figure 3.

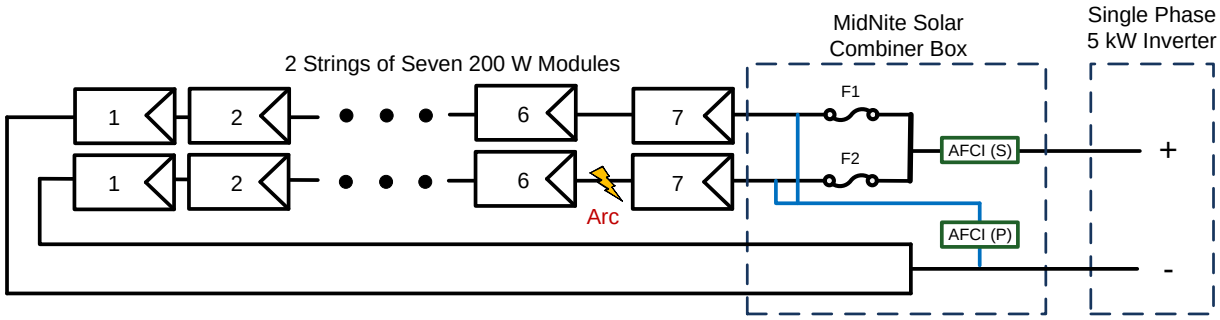

Figure 3: Combiner box AFCI series arc-fault test.

An example arc-fault test is shown in Figure 4. The average trip time for ten series arc-faults was 250 ms and is discussed in Section 3.3.

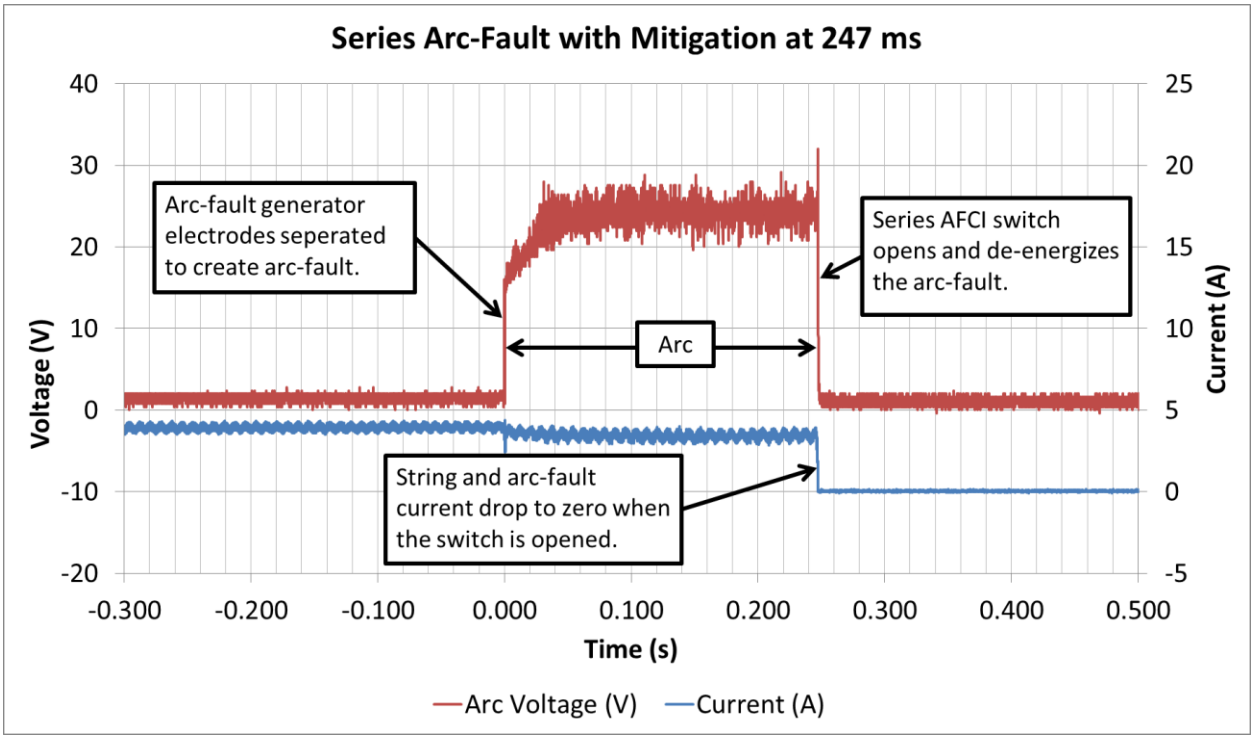

Figure 4: Example series arc-fault test.

3.2 Parallel arc-fault tests

Parallel arc-faults were created within a single string and across two strings with and without the inverter running because the AFCI must mitigate parallel arc-faults regardless of the operation of the inverter. The difference in intra-string and cross-string parallel arc-faults is shown in Figure 5. The instrumentation setup was the same as the series arc-fault tests and arc-fault current and voltage were recorded to determine the arc power and trip times. Example intra-string and cross-string parallel arc-faults are shown in Figure 6 and Figure 7. Typical trip times for parallel arc-faults are discussed in Section 3.3.

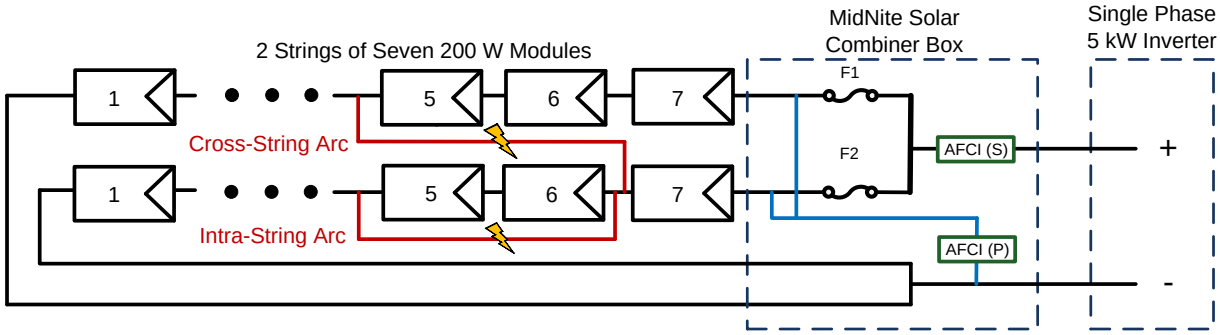

Figure 5: Combiner box AFCI parallel arc-fault tests. Intra-string and cross-string parallel arc-faults are shown.

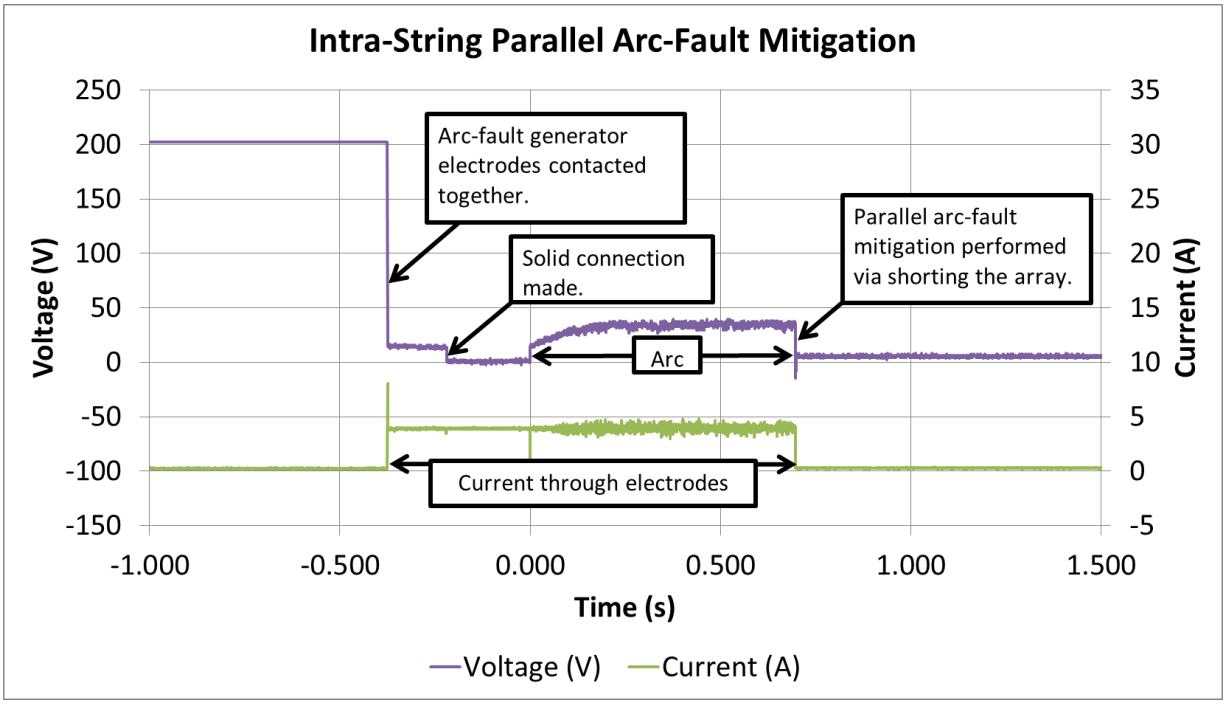

Figure 6: Example parallel intra-string arc-fault test with the inverter running. Detection time was 697 ms for the arc from the positive side of Module 1 to the positive side of Module 6.

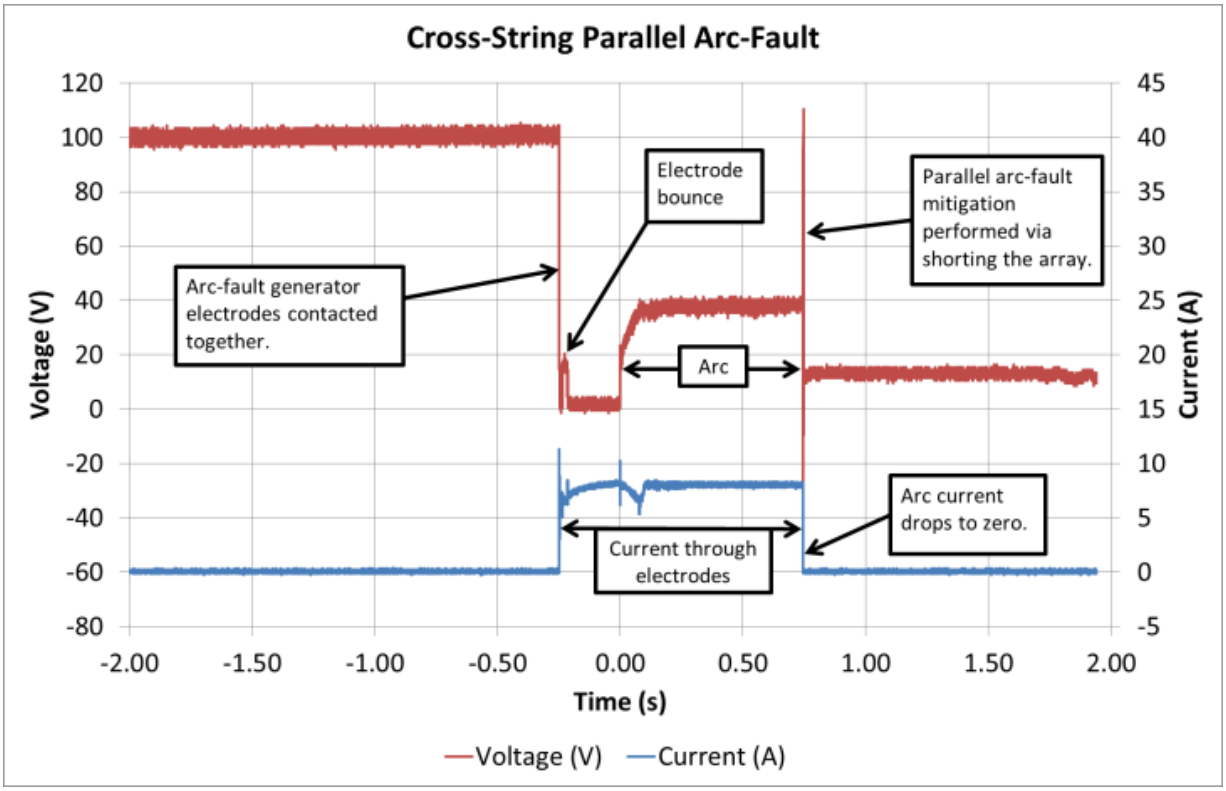

Figure 7: Example parallel cross-string arc-fault test with the inverter running. Detection time was 747 ms for the arc from the positive side of Module 4 to the positive side of Module 6 on the other string.

3.3 Trip time for series and parallel arc-faults

Ten series arc-faults and ten cross-string arc-faults were created with and without the inverter running to determine the average trip times for different arc-fault types. The series arc power was approximately ~90 W and the parallel arc-fault power was ~300 W. The series arc-faults were detected in an average of 250 ms, and the parallel arc-faults were detected on average in 726 ms and 754 ms for the inverter running and not running, respectively. At these power levels, UL 1699B allows two or more seconds to de-energize the arc-fault, so all the tests would have passed the UL test standard for a Type 2 (series and parallel) arc-fault circuit interrupter. The longer trip times for the parallel arc-faults are due to the order of switching operations. Since the MidNite AFCI opens the series switch first, series arc-faults are more quickly de-energized. After the series switch has opened, the parallel arc-fault switch is closed if there is still arcing noise on the DC system. As a result, the parallel arc-faults are de-energized nearly ½ second after series arc-faults.

Table 1: Average trip times for the series and parallel arc-fault circuit interrupter.

Test	Trip Times for Different Arc-Faults (seconds)		
	Series Arc-Fault (AF) (Inverter Running)	Cross-String Parallel AF (Inverter Running)	Cross-String Parallel AF (Inverter Off)
1	0.248	0.746	0.734
2	0.251	0.730	0.747
3	0.250	0.643	0.749
4	0.250	0.747	0.746
5	0.229	0.702	0.747
6	0.251	0.752	0.747
7	0.250	0.741	0.745
8	0.247	0.734	0.765
9	0.273	0.722	0.749
10	0.248	0.746	0.815
Average	0.250	0.726	0.754

4. GROUND FAULT BLIND SPOT FIRE PREVENTION WITH SERIES AND PARALLEL ARC-FAULT CIRCUIT INTERRUPTERS

In some situations, arc-fault circuit interrupters can help prevent fires caused by ground faults. In grounded PV systems, the presence of a blind spot in traditional, fuse-based ground fault protection schemes was recently discovered [7]. In blind spot faults, there is an undetected ground fault to the grounded current-carrying conductor. The problem is that when there is a second ground fault, it creates a current loop through equipment grounding conductor that cannot be opened by the ground fault detection/interruption (GFDI) fuse. As identified by the Solar America Board for Codes and Standards (Solar ABCs) ground fault blind spot working group, arc-fault protection is one possible mitigation method for the type of ground faults that caused the blind spot fires in Bakersfield and Mt. Holly [8]. In these fires, there was burning and, presumably arcing, at the two fault locations. Depending on the fault locations and the AFCI switches, series AFCIs may have helped mitigate the amount of current backfed from the unfaulted strings. Parallel AFCIs would have mitigated the arc-faults entirely.

4.1 Series AFCIs for blind spot ground fault fire prevention

Series AFCIs address arcing current flowing in the normal conduction path of the PV circuit. If the series AFCI detects an arc upstream in the module strings or downstream in the feeder circuit, the contactor will open and stop the flow of current to the arc. Systems incorporating series AFCIs are not protected against blind-spot ground faults but they may reduce the impact of the second fault and possibly prevent a fire.

In the case of the Bakersfield fire, the subsequent ungrounded conductor fault occurred on a large feeder circuit cable, shorting and arcing to a conduit. Fault current was backfed from the unfaulted strings. If series AFCIs had been present in each of the combiner boxes, they should have detected the arcing, reduced the current through the fault path by opening the unfaulted strings, and—depending on the location of the faults—mitigated the fault by opening the fault loop within the array. To illustrate the protection provided by a series AFCI during a “two fault” blind spot fault sequence, consider the potential locations for installing series AFCIs:

A. inverter
B. recombiner box
C. combiner box
D. module-level

Assuming there is an arc at one of the fault locations or series arcing was present when the conductors began to melt, there would be detectable arcing frequencies present in the PV array and AFCIs would trip. Unfortunately, not all of the AFCI locations would have prevented the Bakersfield fire, shown in Figure 8:

- **Inverter AFCI (A)**: The fault current is not interrupted and the fire would continue.
- **Recombiner AFCIs (B)**: The 160 A backfed current from the 28- and 31-string subarrays would be interrupted, but the 152 A current from the 56-string subarray would

have still feed the fault path. This series AFCI configuration would not have prevented the incineration of the DC cabling or the fire.

- **Combiner box AFCIs (C)**: All the fault current would have been prevented from passing through the fault path and the system would have been safely de-energized.
- **Module AFCIs (D)**: The arcing (and ground fault) current would be stopped because all of the modules would be disconnected from the fault path.

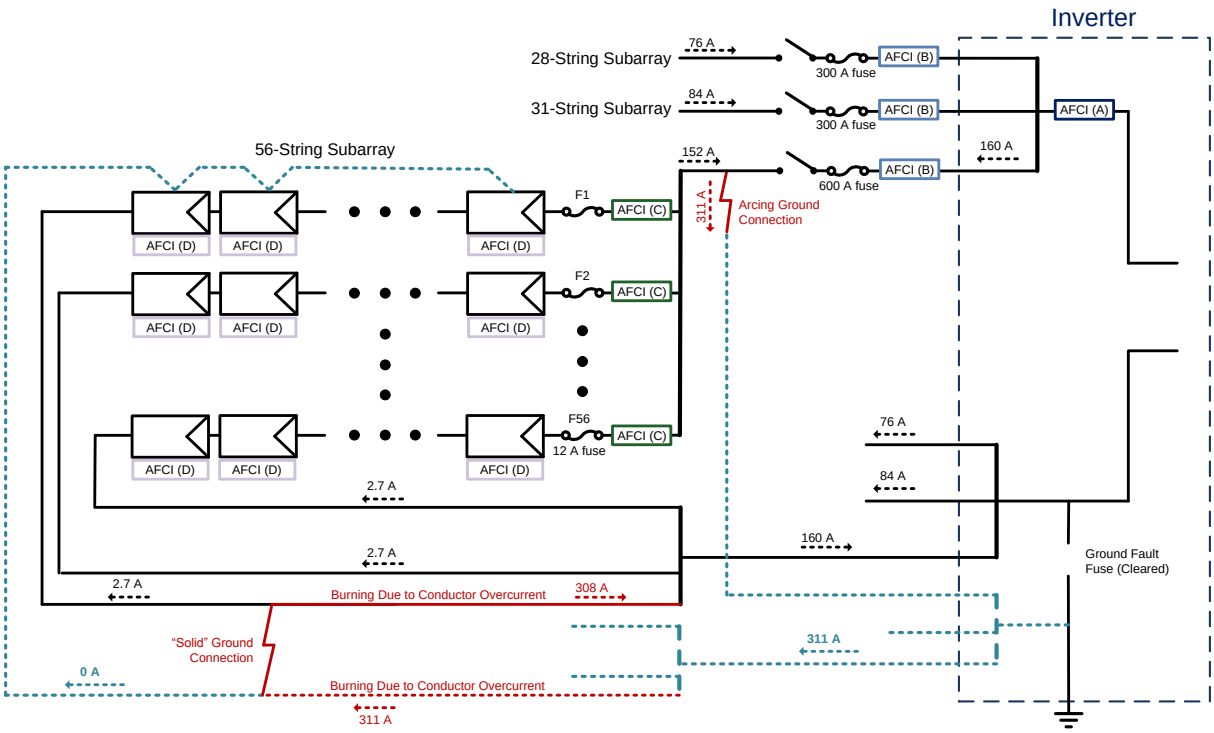

Figure 8: Different arc-fault circuit interrupter placements in an array with a blind spot ground fault scenario.

In the event that the second ground fault occurs to a current-carrying conductor within the string, shown in Figure 9, there is significant backfed current through the faulted string and the overcurrent fuse clears. At that point, the only current path for the faulted string is through the GFDI or ground fault. The current division will depend on the resistance of the fault and ground fault fuse but it is unlikely to clear the ground fault fuse. In this case, only module-level series AFCIs would be able to prevent the arc-fault to ground.

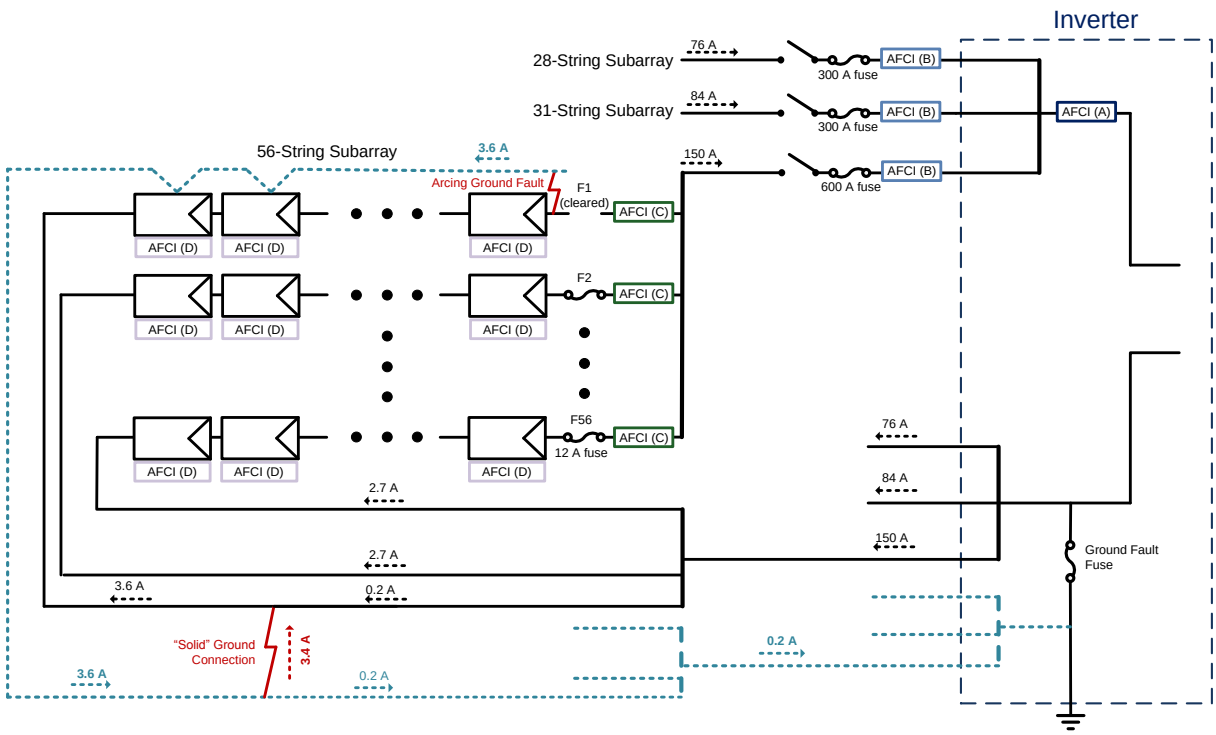

Figure 9: Locations of different arc-fault circuit interrupter technologies during an arc-fault in a single string in a large PV system.

4.2 Parallel AFCIs for blind spot ground fault fire prevention

Parallel AFCIs are significantly more likely to prevent a blind spot ground fault fire. In the case of an arcing ground fault (with or without a previous blind spot ground fault), the fault is electrically identical to a parallel arc-fault to the grounded current carrying conductor. Thus, if a parallel AFCI using a shorting mitigation technique is present, it would short the array and prevent the arc-fault fire. In the case of a parallel AFCI that opened all the module connectors, it would also mitigate the ground fault by de-energizing the entire system.

4.3 Ground fault blind spot fire recreation with MidNite parallel AFCI

In order to verify a parallel AFCI would mitigate a "two fault" blind spot ground fault, the sequence of events that cause the Mt. Holly and Bakersfield fires was recreated: first, a solid connection to the grounded current-carrying conductor was established and then an arc-fault was created to the equipment grounding conductor (EGC) from another location in the array. In the test at DETL, shown in Figure 10, the second fault was created from the positive side of the sixth module on one of the strings using a branch MC4 connector, arc-fault generator, and clamp attached to the PV system frame. When the arc-fault was established, the ground fault fuse in the inverter cleared, the series AFCI opened the strings, and then the parallel AFCI shorted the array to de-energize the arc-fault. The GFDI and the series AFCI alone were not sufficient to mitigate the arcing blind spot ground fault.

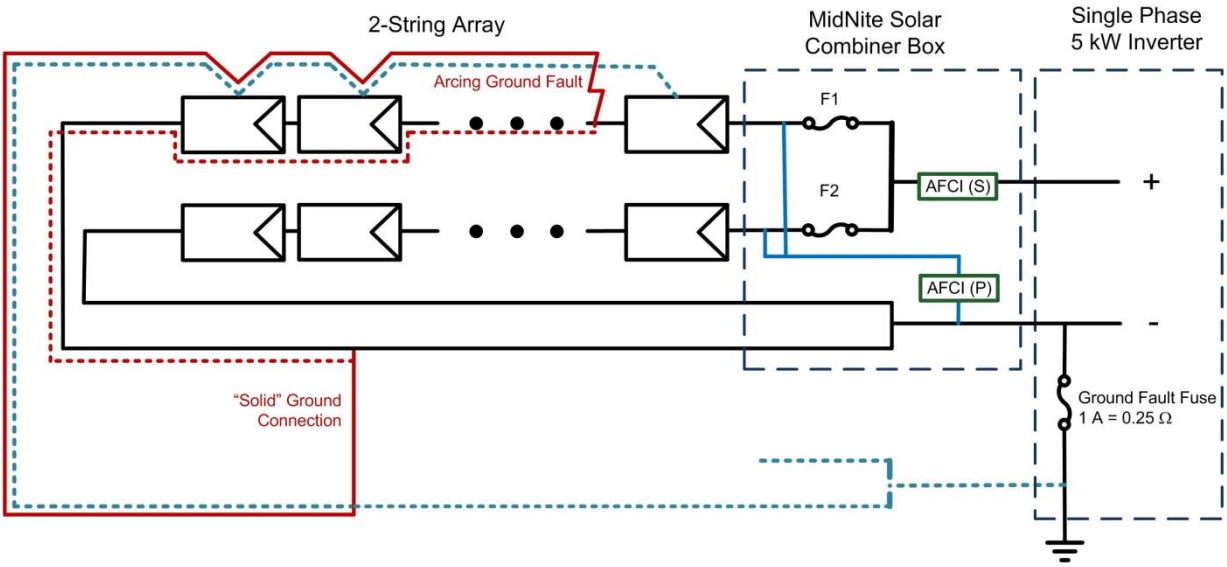

Figure 10: Blind spot fire recreation at DETL with a parallel AFCI combiner box.

5. CONCLUSIONS

Sandia National Laboratories collaborated with MidNite Solar to recognize and address the technical challenges surrounding creating a series and parallel arc-fault circuit interrupter combiner box. The prototype device first assumes any arc-fault noise is from a series arc-fault and opens the array; then, if there is still arc-fault noise on the PV system, it shorts the array to mitigate the parallel arc-fault. The prototype was tested at Sandia National Laboratories and successfully mitigated series and parallel arc-faults in a 2.8 kW system within the UL 1699B trip requirements for a Type 2 AFCI. The combiner box was also successful in detecting and mitigating an arcing ground fault with a pre-existing, undetected ground fault to the grounded current carrying conductor. This type of fault sequence is known to have caused at least two fires in the United States.

REFERENCES

[1] J. Johnson, B. Pahl, C.J. Luebke, T. Pier, T. Miller, J. Strauch, S. Kuszmaul and W. Bower, “Photovoltaic DC arc fault detector testing at Sandia National Laboratories,” 37th IEEE PVSC, Seattle, WA, 19-24 June 2011.

[2] J. Johnson, M. Montoya, S. McCalmont, G. Katzir, F. Fuks, J. Earle, A. Fresquez, S. Gonzalez, and J. Granata, “Differentiating series and parallel photovoltaic arc-faults,”38th IEEE PVSC, Austin, TX, 4 June, 2012.

[3] J. Johnson, C. Oberhauser, M. Montoya, A. Fresquez, S. Gonzalez, and A. Patel, “Crosstalk nuisance trip testing of photovoltaic DC arc-fault detectors,” 38th IEEE PVSC, Austin, TX, 5 June, 2012.

[4] J. Johnson, K.D. Blemel, and F. Peter, "Preliminary Photovoltaic Arc-Fault Prognostic Tests using Sacrificial Fiber Optic Cabling," Sandia Technical Report, SAND2013-1185, Feb. 2013.

[5] J. Johnson, M. Neilsen, P. Vianco, N.R. Sorensen, M. Montoya, and A. Fresquez, “Accelerated life testing of PV arc-fault detectors,” 39th IEEE PVSC, Tampa, FL, 16-21 June, 2013.

[6] J. Flicker and J. Johnson, “Electrical simulations of series and parallel PV arc-faults,” 39th IEEE PVSC, Tampa, FL, 16-21 June, 2013.

[7] J. Johnson, and W. Bower, “Codes and standards for photovoltaic DC arc-fault detection,” Solar ABCs Stakeholder Meeting, Solar Power International, Dallas, TX, 21 Oct. 2011.

[8] H. Haeberlin, “Arc Detector as an External Accessory Device for PV Inverters for Remote Detection of Dangerous Arcs on the DC Side of PV Plants,” European Photovoltaic Solar Energy Conference Valencia, Spain 2010.

[9] C. Stoble and P. Meckler, “Arc faults in photovoltaic systems,” International Conference on Electrical Contacts, Charleston, SC, 4-7 October, 2010.

[10] B. Brooks. “The ground-fault protection blind spot: Safety concern for larger PV systems in the U.S.,” Solar American Board for Codes and Standards Report, January 2012.

[11] G. Ball, B. Brooks, J. Johnson, J. Flicker, A. Rosenthal, J.C. Wiles, and L. Sherwood, "Final report: Examination of inverter ground-fault detection 'blind spot' with recommendations for mitigation," Solar America Board for Codes and Standards Technical Report, 2013.

DISTRIBUTION

1 U.S. Department of Energy
Solar Energy Technology Program
Attn: Kevin Lynn
950 L'Enfant Plaza
Washington, DC 20585

2 MidNite Solar
Attn: boB Gudgel
Andrew Meares
17722 - 67th Ave NE
Arlington, WA 98223

1 DNV KEMA Energy & Sustainability
Attn: Greg Ball
100 Montgomery St, Suite 1750
San Francisco, CA 94104

1 Brooks Engineering
Attn: Bill Brooks
3949 Joslin Lane
Vacaville, CA 95688

1	MS0889	N. Robert Sorensen	01818
1	MS0951	Jennifer Granata	06112
1	MS1033	Jay Johnson	06112
1	MS1033	Armando Fresquez	06112
1	MS1033	Sigifredo Gonzalez	06112
1	MS1033	Charles J. Hanley	06112
1	MS1084	Jack Flicker	01748
1	MS0899	Technical Library	09532 *(electronic copy)*

This page is intentionally left blank.

Sandia National Laboratories