Application of Modern Engineering Design Tools for Reliability in Wind Turbine Rotating Machinery

Dr. Ashley Crowther, VP Engineering Wind, US Wind Technology Center
03 August 2011
SNL Wind Turbine Reliability Workshop 2011

Romax Technology

- Rotating machinery experts with 200 employees worldwide
- Boulder office dedicated to serving US customers for wind engineering

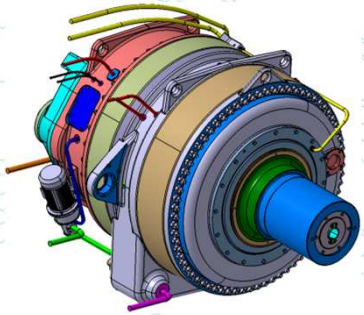

Gearbox Design

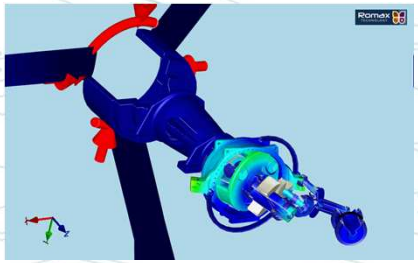

Drivetrain dynamics

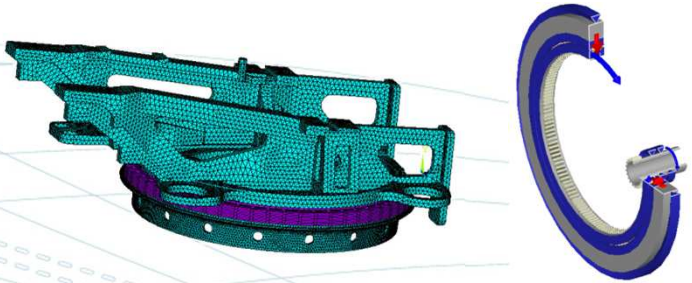

Pitch and Yaw System Design and Analysis

Instrumentation

Drivetrain inspections

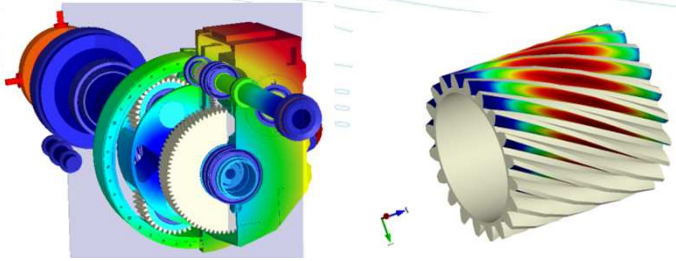

Gear and bearing durability and vibration

- Contact: Ashley Crowther, VP Engineering – Wind
  ashley.crowther@romaxtech.com, +1 303 562 6064

© Copyright Romax Technology Limited.

Outline

- Common reliability issues
- Industry trends
- Challenges for large structures
- Large bearing engineering
- Gearbox engineering
- Structures and main bearings

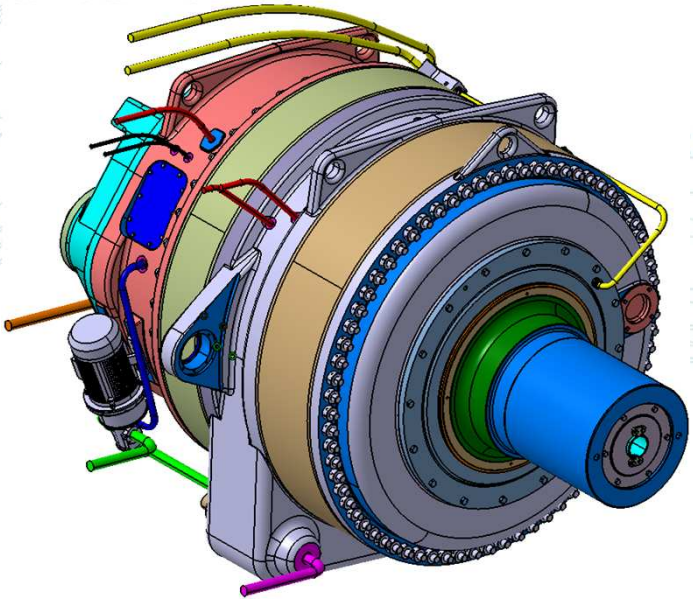

© Copyright Romax Technology Limited.

Common reliability issues

- Spalling and failure for main bearing raceways
  - Poor installation, axial sliding in SRBs
- Micropitting on gears and bearings
  - Poor run in practices and insufficient lubricant film thickness
- Gear fracture / pitting
  - Poor gear alignment leading to edge loading and excessive stress
  - Material inclusions – bad batch
  - Poor load sharing in planetary gears
- Skidding on high speed shafts
  - Incorrect preload on taper roller bearing sets
- Cracking on large bearing raceways
  - Poor process control for heat treatment

SUPPLEMENTARY INFORMATION FOR WIND TURBINE GEARBOX FIELD FAILURE REPORT

EXAMPLES OF BEARING FAILURES

Examples and comments are provided below for common bearing failures seen in wind turbine gearboxes including indications of severity.

Micropitting 3	Source: Romax	Significant strip of micropitting on full circumference of rolling element or raceway. Contacting profiles modified by wear to an extent.
Micropitting 5	Source: Romax	Micropitting evident around entire raceway or rolling element. Associated wear of geometry changing the rolling contact zone greatly. Accompanying macropitting may be evident, such as in the edge contact region.
Adhesive wear 3	Source: Romax	Evidence of transfer of material. Tearing likely in the direction of sliding - the material welds instantaneously and is torn off.

© Copyright Romax Technology Limited.

Common reliability issues

- Overload and spalling damage on pitch and yaw bearings
  - Lack of design understanding for behavior of large flexible bearing rings in flexible structures
- Gear and bearing spalling originating from debris damage (3 body abrasion)
  - Failure to repair when problem is incipient, poor lubrication design leading wear particles into rolling contacts
- Large casting cracking, bolts shearing
  - Poor understanding of boundary conditions and stress risers, high loading after bearing/gear failure
- Skidding damage in high speed bearings
  - Poor design of preload in taper roller bearing set … leading to poor low sharing and underloaded bearings in some load conditions

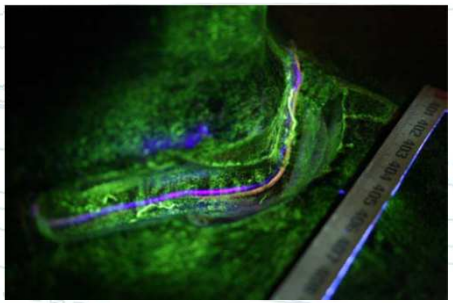

© Copyright Romax Technology Limited.

Industry trends

- Improved manufacturing and material quality
  - Learning from mistakes, continuous improvement
  - Less pressure to supply - running plants at lower capacity, OEM's requiring less suppliers
- Holding tighter tolerances over large dimensions
- Improved bearings and gears
  - Coatings, super finishing, better run-in
- Advanced testing
  - NREL large dyno, Clemson large dyno
  - More sophisticated in house test capability
- Advanced design tools and intensive simulation

© Copyright Romax Technology Limited.

Industry Trends - Advanced testing

- Bigger equipment for very large loads
- Transient loads
- Comprehensive Instrumentation
- Accelerated fatigue tests
- Off-axis loads

MTS NTL Equipment simulating real life loads for large WTG's

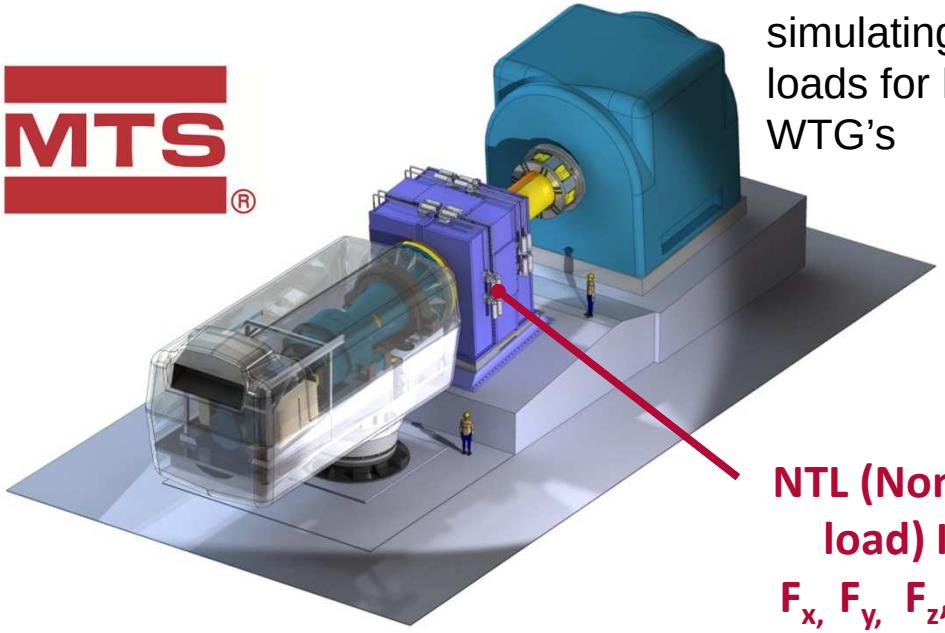

NTL (Non-torque load) Input, F_x, F_y, F_z, M_x, M_y

© Copyright Romax Technology Limited.

Challenges for Large Structures

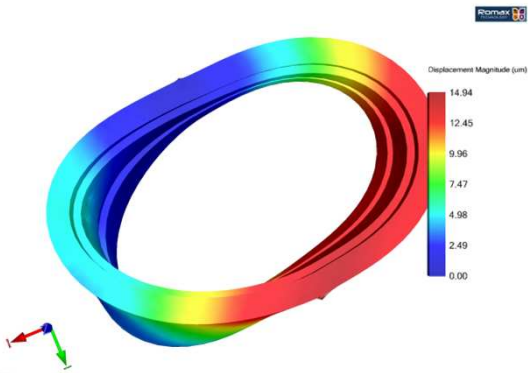

- Light enough – yet strong enough
- Holding tight tolerances over large dimensions
  - e.g. accurate planet bearing pin positions – effects planet load sharing
- Understanding component flexibility and structural interactions
  - e.g. deflection of hub/pitch bearing raceways – effects roller load distribution and raceway load sharing
- Robust fatigue analysis
  - Massive FEA problems, so many elements
- Good load information, accounting for MDOF loads

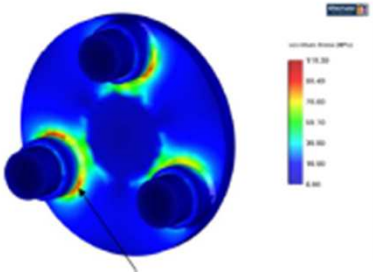

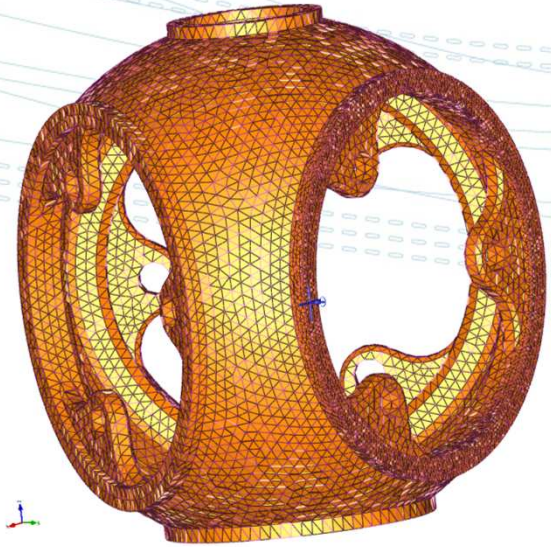

© Copyright Romax Technology Limited.

Large Bearing Analysis

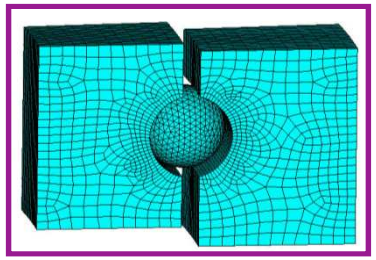

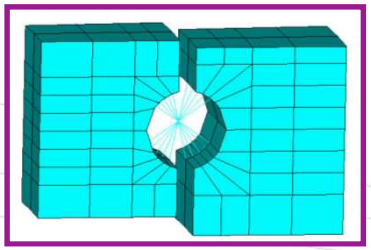

- Analysis challenges:
  - Proportionally narrow cross section
  - Subject to extreme loads
  - Housed within flexible structures
- For these bearings the assumption of rigid rings is not valid
- Pitch bearings are loaded with 3 forces and 2 bending moments. Can't be treated as an axial-symmetrical problem - modelling the whole bearing is necessary
- Ball and roller contacts are very small, high compressive stress regions.
- These contact problems are very difficult to solve - highly non-linear and often extremely sensitive
- Hertzian contact analysis using FEA is impractical due to extraordinary mesh refinement required in contact regions.
- More effort is needed for this application where bearings need to last a long time

© Copyright Romax Technology Limited.

Pitch Bearing Engineering

- Analysis tool must model flexible bearing rings, blade root and hub
- Whole system deflections under complex loading are then accurately captured

Rigid bearing

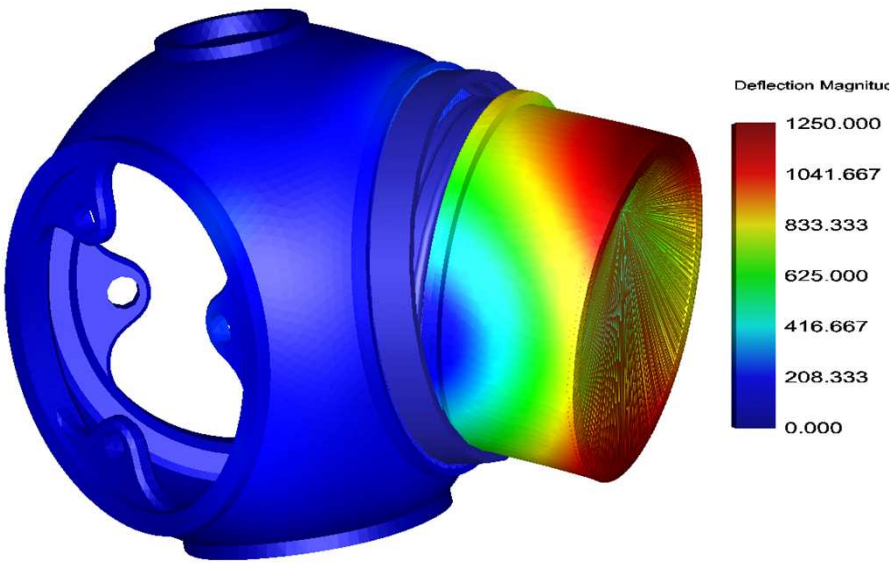

Max deflection

Flexible bearing

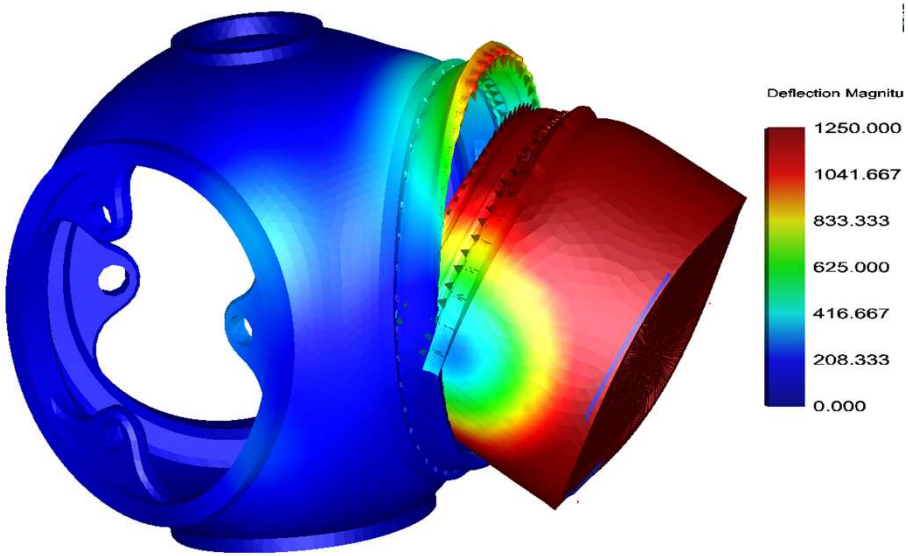

© Copyright Romax Technology Limited.

* Same deflection scaling factor

Pitch Bearing Engineering

- Predict roller load sharing and load distribution
- Run many load cases (hundreds) with reasonable simulation time
  - Allows detailed designs studies (preloads, geometry, tolerances etc.)
  - Perform detailed fatigue computations

Rigid bearing

Row 1

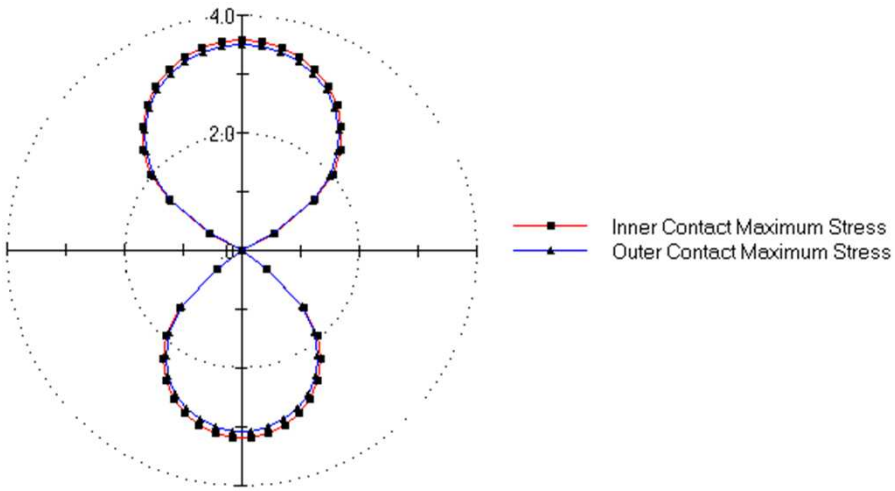

Flexible bearing

Row 1

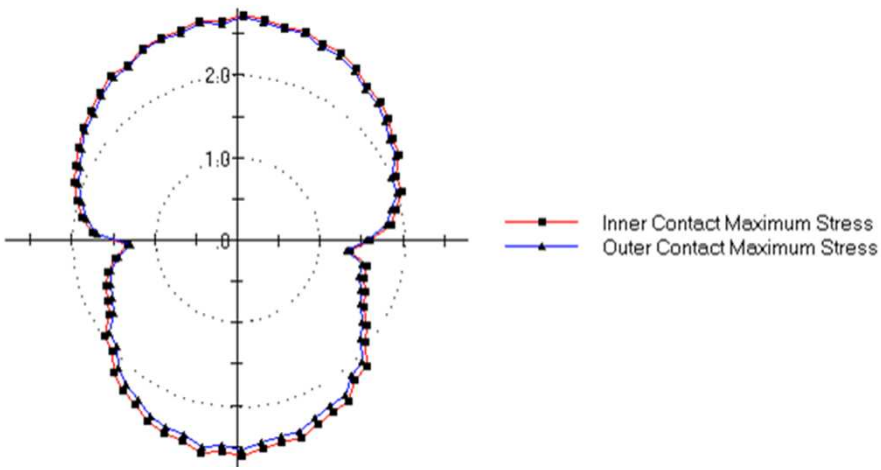

© Copyright Romax Technology Limited.

Pitch Bearing Engineering

- Predict contact ellipse truncation
- Occurs under high overturning moment
- Balls travel up the raceway and contact ellipse can overhang the raceway edge
- Leads to high contact stresses and early failure

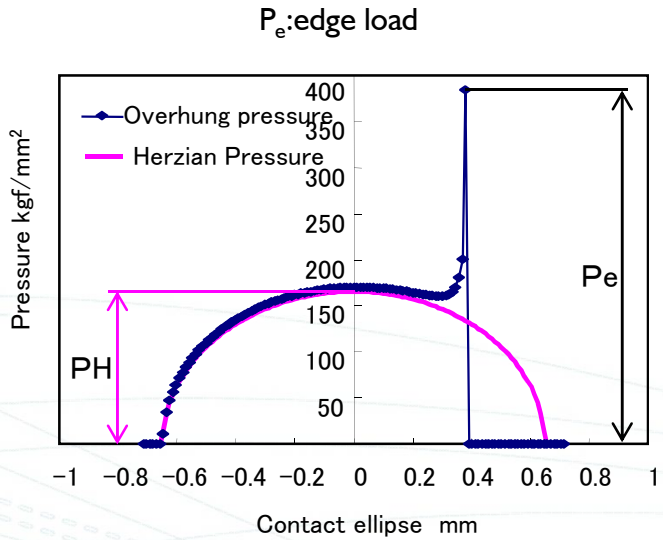

[FE R&D Investigation Result]

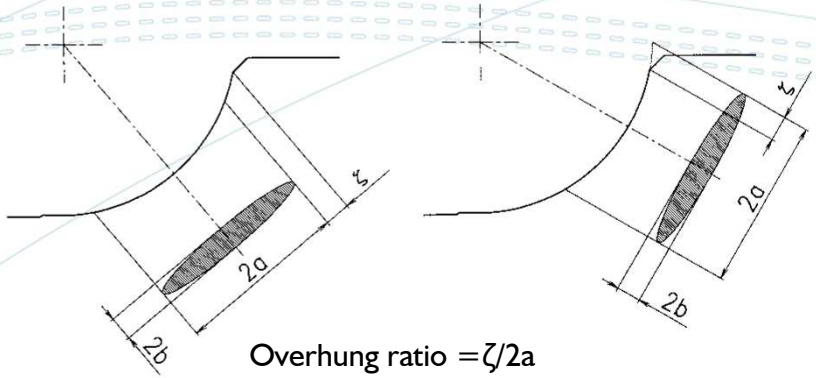

Overhung ratio $=\zeta/2a$

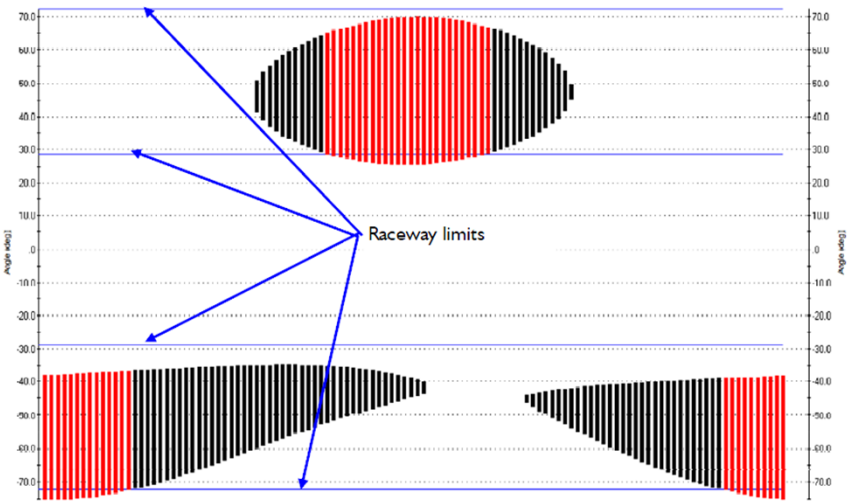

[RomaxWIND Results for Contact Area]

© Copyright Romax Technology Limited.

Gearbox Engineering

- Example: NREL Gearbox Reliability Collaborative
- Brings together gearbox engineers, manufactures, owners, expert consultants and academics
- Improve reliability and decrease cost of energy
- Comprehensive testing and instrumentation program
- Validation of advanced analysis tools:
  - Need to predict the real physics
  - Models need to be carefully built and checked
  - Application needs to be well understood
  - Public domain
- Application of research into commercial products -->

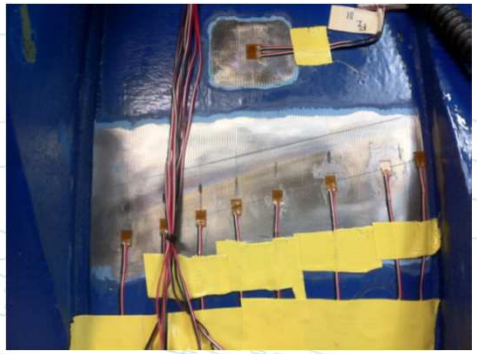

GRC Instrumentation

Romax 3MW Gearbox Design

© Copyright Romax Technology Limited.

Gearbox Engineering

- RomaxWind drivetrain model for GRC gearbox
- Coupled non-linear system with flexible structures and contact mechanics

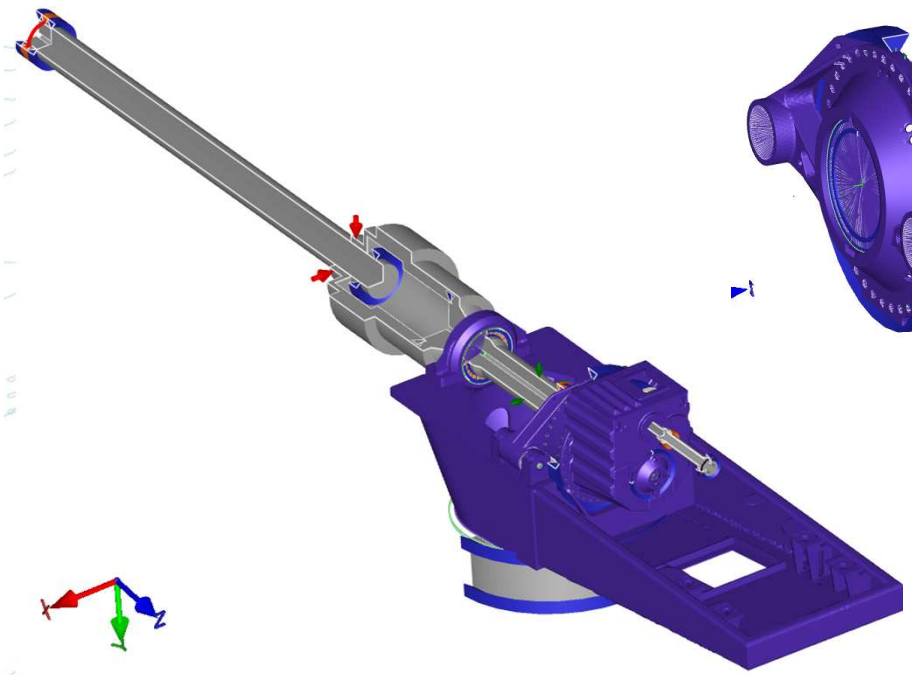

Drivetrain Model under Dyno Test

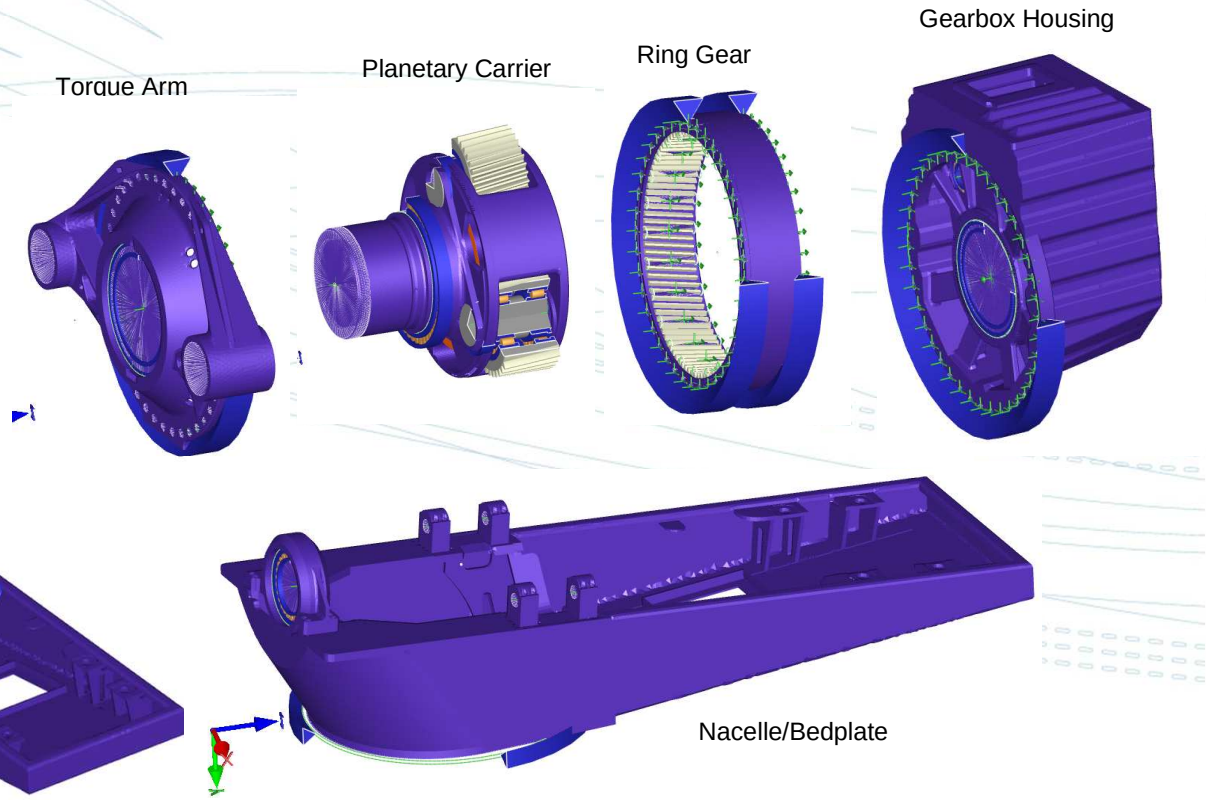

Flexible structures (meshed parts)

© Copyright Romax Technology Limited.

Gearbox Engineering

- Example validation result – planet/ring gear mesh load distributions
- Strain gauges used to measure ring gear load distributions

Planet 1 → Ring at 0 Degrees

Downwind

Planet 3 → Ring at 240 Degrees

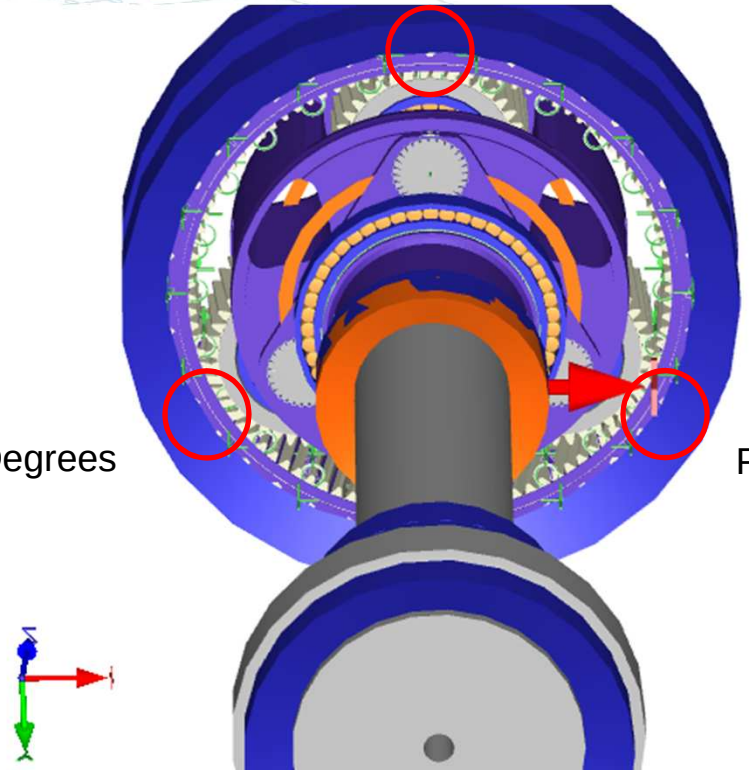

Planet 2 → Ring at 120 Degrees

Upwind

© Copyright Romax Technology Limited.

Gearbox Engineering

- Example validation result
- Excellent correlation between measurement and simulation
- All three planet/ring gear meshes
- Tooth load sharing and load distribution accurately captured
- Allows for engineering with confidence

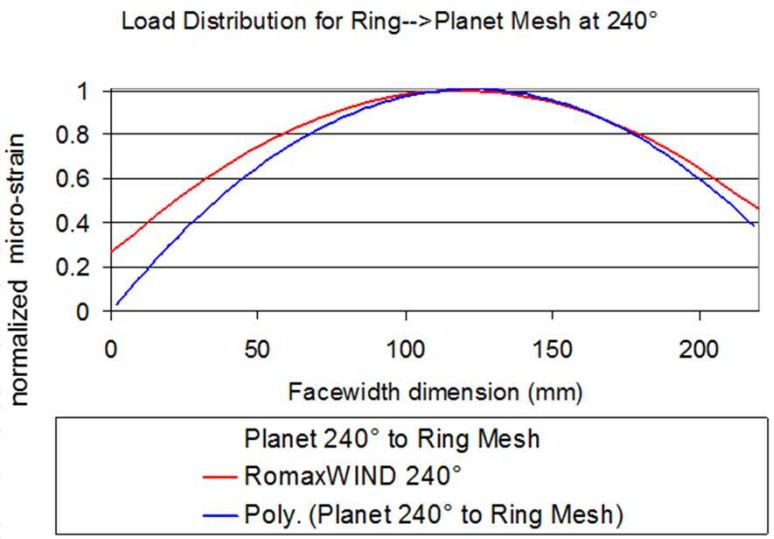

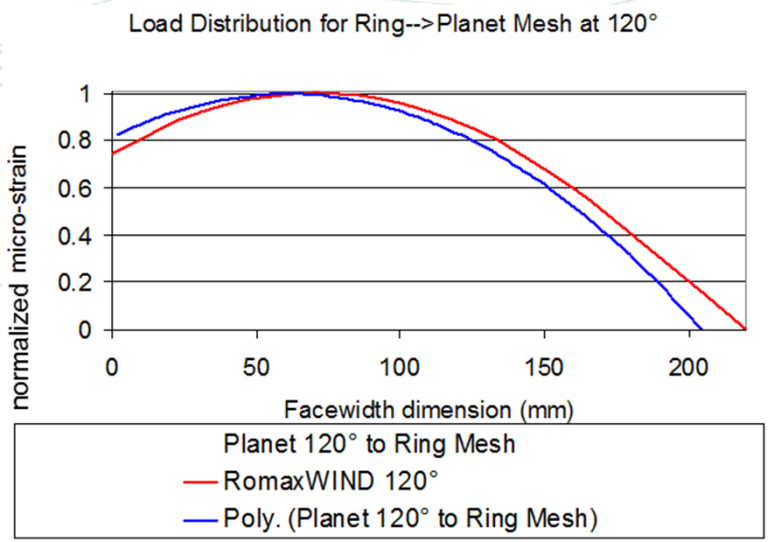

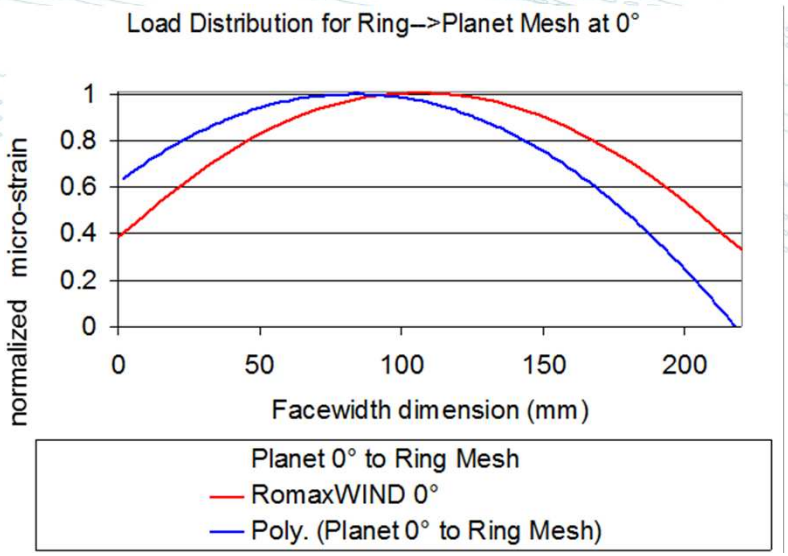

© Copyright Romax Technology Limited.

Gearbox Engineering

- What does a drivetrain analysis tool require to capture the real physics?
  - Flexible structures for shafts, housing, carrier, bedplate
  - Accurate contact mechanics calculation:
    - Macro (mm) and micro (μm) geometry
    - Effect of preload and clearance in bearings
  - Effect of tolerances
  - Thermal effects – housing growth, changes in bearing preload/clearance
  - Correct loads and boundary conditions
  - Coupled non-linear solutions for whole system deflection and contact
- What do we gain?
  - Accurate assessment of: misalignment, contact stress, root stresses, film thickness, micropitting resistance, tip-root interference, planet load sharing, tooth load distributions, gear transmission error and housing vibration, component strength and durability
  - Better engineering = more reliable gearboxes

© Copyright Romax Technology Limited.

Structures and Bearings

- Example: Sandia Labs R&D program for Active Aero Load Control (AALC)
- Actively controlled blade trailing edge flap technology
  - Sense local loads along the blades
  - Attenuate local loads with fast acting distributed aero-control surfaces

- Controller designed to minimize blade-tip deflection
- Reduce blade fatigue loads
- Reduce loads through the structural load path
- Allows for bigger rotors and more energy capture

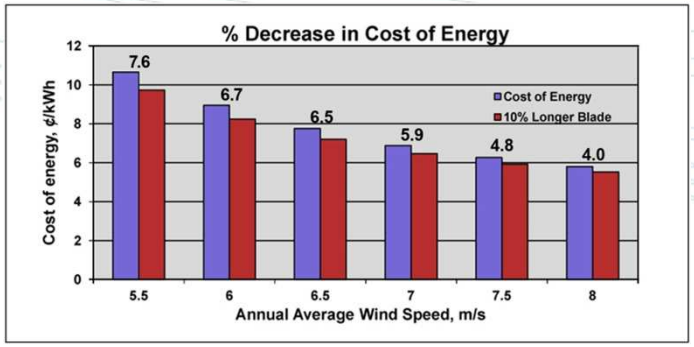

© Copyright Romax Technology Limited.

Structures and Main Bearings

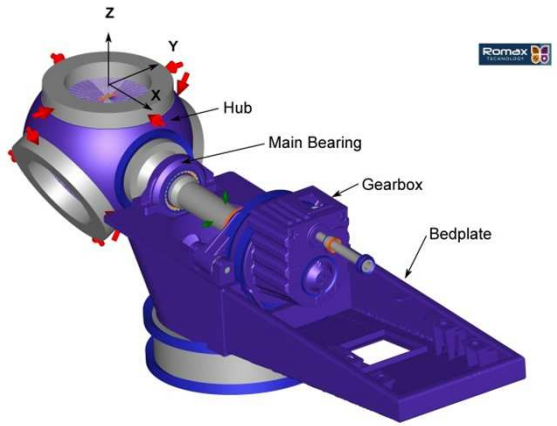

- What are the benefits to:
  - The rotor hub?
  - The main frame?
  - The pitch bearings?
  - The main bearings?
- Sandia simulated the blade and rotor loads for adapted GRC turbine (750kW)
  - With AALC
  - Without AALC
  - Outputting load time histories for key operational conditions
- Romax used advanced analysis tools to assess the strength and fatigue for these components:
  - How much do we gain from AALC?
    - Conduct assessment including the whole structural load path and system interactions in one simulation

© Copyright Romax Technology Limited.

Structures and Main Bearings

- Comparison for rotor hub extreme loads (Max/Min in all dimensions)
  - Forces reduced marginally
  - Very significant reduction in rotor moments

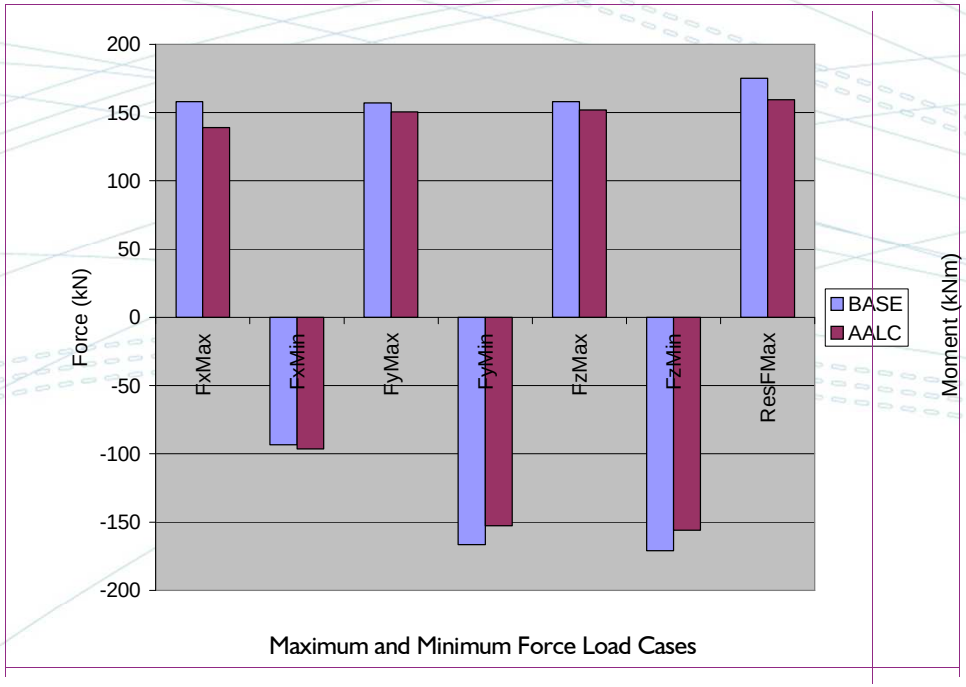

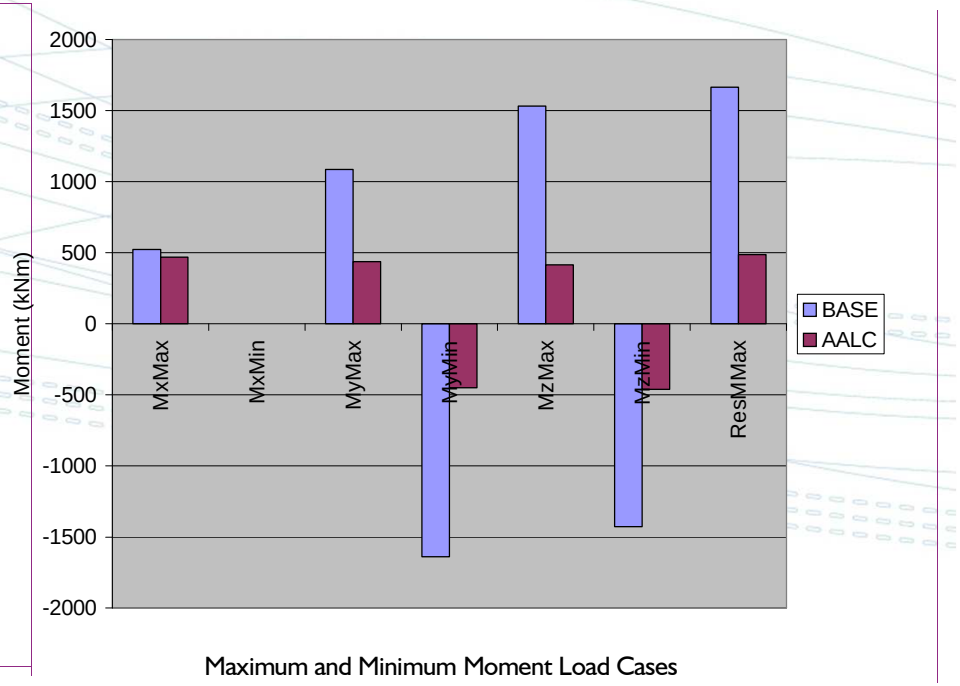

© Copyright Romax Technology Limited.

Structures and Main Bearings

- AALC provides a significant reduction to main frame stresses

Base

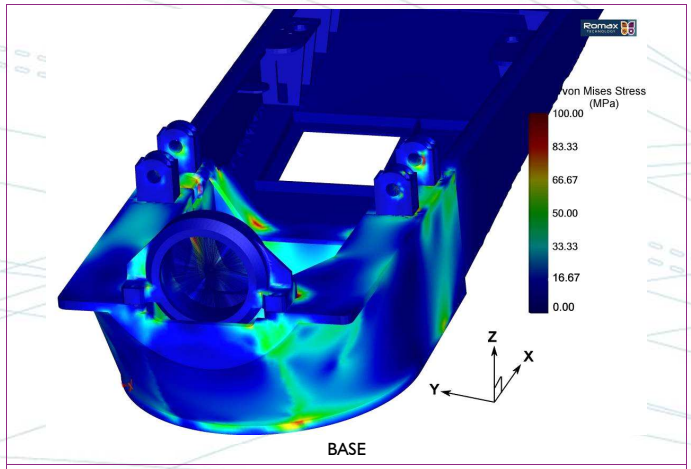

AALC

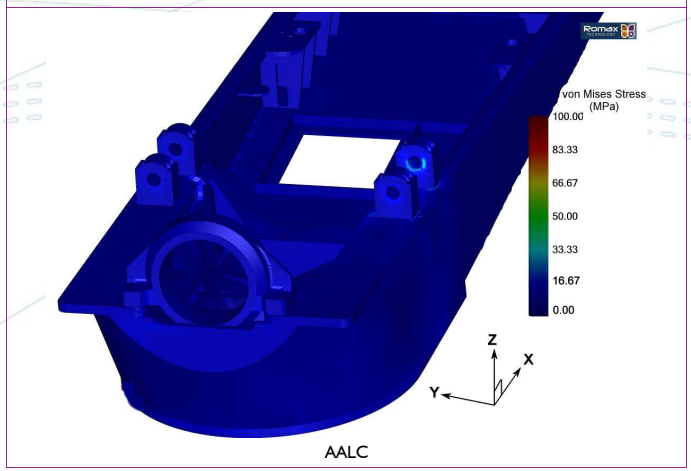

Max Moment about Y-Axis

Base

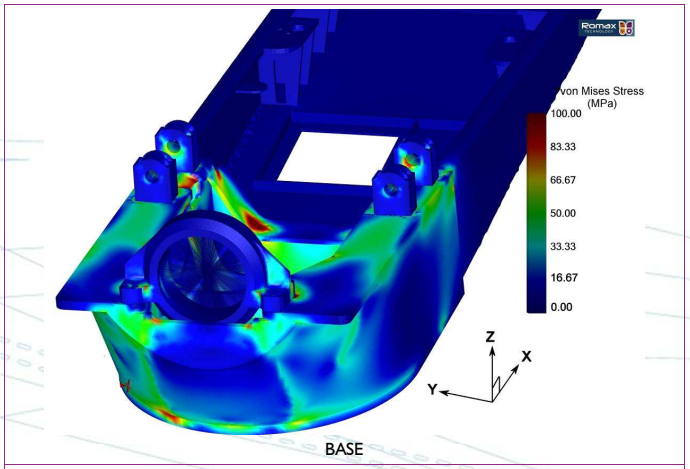

AALC

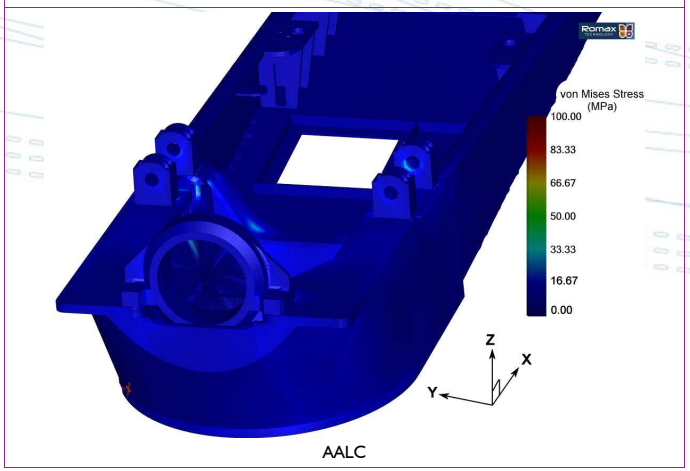

Max Moment about Z-Axis

© Copyright Romax Technology Limited.

Structures and Main Bearings

- Large reduction in main bearing maximum contact stress – higher margins
- Helpful reduction in main bearing fatigue
- Good reductions in gearbox carrier bearing fatigue (3 point mounted configuration)

Bearing	Relative Change in Fatigue Damage due to AALC (ISO 281)
Main	-7%
Upwind Carrier	-32%
Downwind Carrier	-16%

Fatigue for main shaft supporting bearings

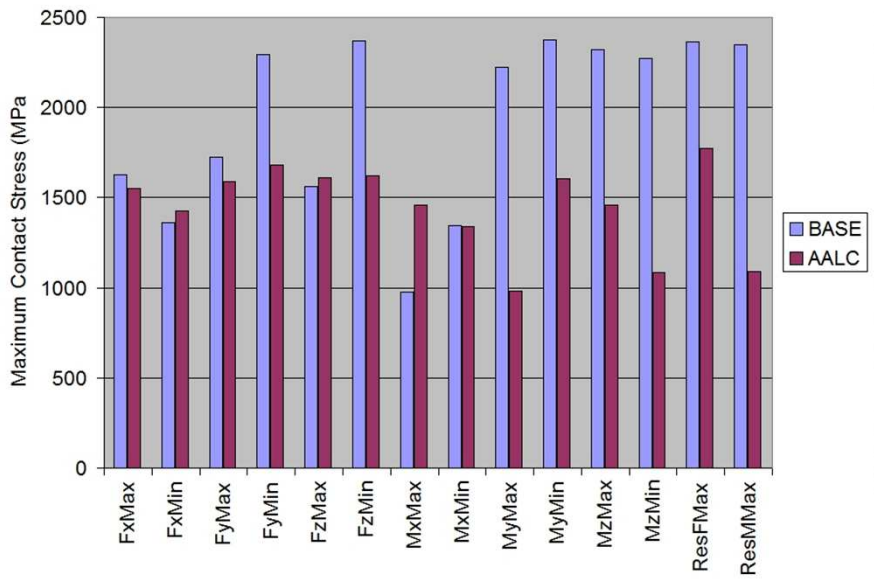

Main bearing contact stress for extreme loads

© Copyright Romax Technology Limited.

Closing Comments

- Aspects to improved reliability:
  - Good material quality
  - Robust manufacturing – inspection, good process controls and systematic gauge calibration, continuous improvement, consistent tolerance and heat treatment
  - Thorough prototype and component testing
  - Proper assembly/commissioning
  - Good maintenance
  - Effective condition monitoring/inspection
- Robust design and engineering is needed to benefit from other good practices

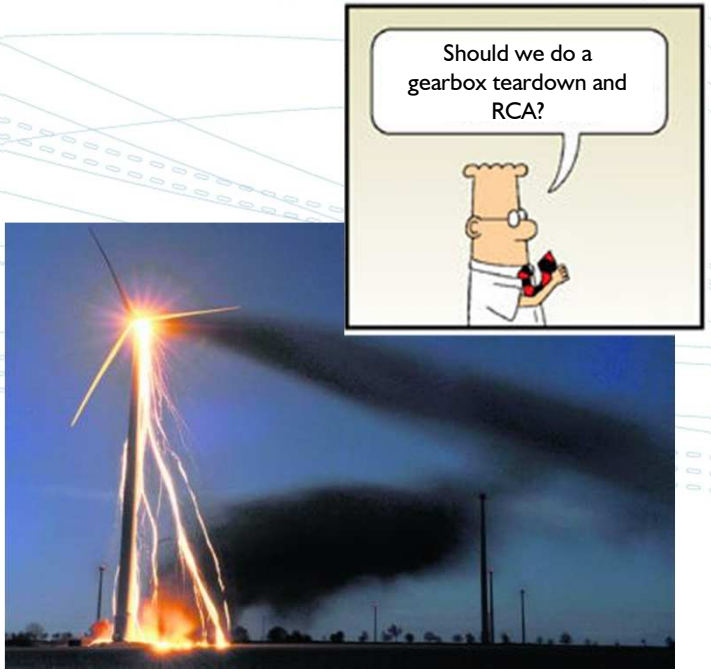

- Acknowledgements and thanks to:
  - Dale Berg and Brian Resor (Sandia Labs)
  - All the folks at NREL for the GRC
  - Romax engineering team

© Copyright Romax Technology Limited.

Romax Technology Limited is a leading independent drivetrain consultancy offering technical consulting, design services and software tools for gearboxes, drivetrains and bearings for the transportation and wind energy industries.

Romax offers both its consultancy services and its software package, RomaxDesigner, to grant clients confidence in all aspects of drivetrain design, analysis and dynamics.

UK Head Office
T: +44 (0)115 951 8800
E: sales@romaxtech.com

Europe
T: +33 (0) 6 80 91 82 80
E: sales_eu@romaxtech.com

China
T: +86 571 8378 6230
E: romaxchina@romaxtech.com

India
T: +91 (020) 6560 2288
E: sales_in@romaxtech.com

Japan
T: +81 (0) 3 3716 9249
E: sales_jp@romaxtech.com

South Korea
T: +82 (0) 70 7580 6210
E: sales_kr@romaxtech.com

North America
T: +1 (0) 248 250 7691
E: sales_us@romaxtech.com

THE QUEEN'S AWARDS FOR ENTERPRISE: INTERNATIONAL TRADE 2009

ISO 9001 REGISTERED FIRM

Automotive News PACE AWARD Honorable Mention

www.romaxtech.com