SANDIA REPORT SAND84—1287 • Unlimited Release • UC—60
Printed April 1985

Structural Design of the Sandia 34-Meter Vertical-Axis Wind Turbine

Dale E. Berg

Prepared by
Sandia National Laboratories
Albuquerque, New Mexico 87185 and Livermore, California 94550
for the United States Department of Energy
under Contract DE-AC04-76DP00789

SF2900Q(8-81)

Issued by Sandia National Laboratories, operated for the United States Department of Energy by Sandia Corporation.
NOTICE: This report was prepared as an account of work sponsored by an agency of the United States Government. Neither the United States Government nor any agency thereof, nor any of their employees, nor any of their contractors, subcontractors, or their employees, makes any warranty, express or implied, or assumes any legal liability or responsibility for the accuracy, completeness, or usefulness of any information, apparatus, product, or process disclosed, or represents that its use would not infringe privately owned rights. Reference herein to any specific commercial product, process, or service by trade name, trademark, manufacturer, or otherwise, does not necessarily constitute or imply its endorsement, recommendation, or favoring by the United States Government, any agency thereof or any of their contractors or subcontractors. The views and opinions expressed herein do not necessarily state or reflect those of the United States Government, any agency thereof or any of their contractors or subcontractors.

Printed in the United States of America
Available from
National Technical Information Service
U.S. Department of Commerce
5285 Port Royal Road
Springfield, VA 22161

NTIS price codes
Printed copy: A02
Microfiche copy: A01

SAND84—1287
Unlimited Release
Printed April 1985

Distribution
Category UC—60

Structural Design of the Sandia 34-Meter Vertical-Axis Wind Turbine

Dale E. Berg
Wind Energy Research Division
Sandia National Laboratories
Albuquerque, NM 87185

Abstract

Sandia National Laboratories, as the lead Department of Energy laboratory for Vertical-Axis Wind Turbine development, is currently designing a 34-m diameter Darrieus-type vertical-axis wind turbine. This turbine will be a research test bed that provides a focus for advancing technology and validating design and fabrication techniques in a size range suitable for utility use. Structural data from this machine will allow structural modeling to be refined and verified for a turbine on which the gravity effects and stochastic wind loading are significant. Performance data from it will allow aerodynamic modeling to be refined and verified. This design effort incorporates Sandia's state-of-the-art analysis tools in the design of a complete machine. In this report I describe the analytic tools we are using, summarize the conceptual design procedure, and present portions of our detailed design as it existed in September 1984.

Acknowledgments

Many people contributed to the work described in this report. I will not attempt to name them all, but I wish to acknowledge a few who made significant contributions to the test bed project: Robert Grover and Tom Gardner did the design work; Tom Ashwill did the structural and detailed design analyses; Debby Oscar and Tim Leonard contributed to the structural analysis; Tim Leonard also provided the computer support for the project. Paul Klimas performed the work on aerodynamic and drivetrain dynamics, and Robert Nellums was responsible for the variable-speed generator. Emil Kadlec, as project leader, coordinated the entire effort, and Richard Braasch, supervisor of the Wind Energy Research Division, gave us his wholehearted support and acquired the funding to make this project possible. George Tennyson of the Department of Energy, Albuquerque, has been an enthusiastic supporter in our requests for DOE approval and funding.

Contents

Introduction 7
Design Tools 8
ECON16 8
FEVD 8
FFEVD 9
Design Process 10
Option 1 10
Option 2 11
Option 3 12
Evaluation 12
Detailed Design 12
Summary 15
References 16

Figures

1 Comparison of NACA 0018 Airfoil Profile with SAND 0018/50 7
2 Finite Element Model of DOE 100-kW Turbine 9
3 Fan Plot of Rotor Frequencies for DOE 100-kW Turbine 9
4 Fan Plot and System Driving Frequencies for DOE 100-kW Turbine 10
5 Fan Plot for Option 1 11
6 Fan Plot for Option 2 12
7 Fan Plot for Option 3 12
8 Blade-to-Tower Joint and Clamp 13
9 Blade-to-Blade Joint 13
10 Construction of a 1.22-m Chord NACA 0021 Airfoil Section 14
11 Upper Bearing Design 14
12 Fan Plot for the Test Bed 15
13 Artist's Conception of Sandia's 34-m Test Bed 15

Structural Design of the Sandia 34-Meter Vertical-Axis Wind Turbine

Introduction

Sandia National Laboratories (SNL), as the lead DOE laboratory for Vertical-Axis Wind Turbine (VAWT) development, has developed state-of-the-art computer codes to model and analyze the structural and aerodynamic performance of VAWTs. Data from the SNL 17-m research machine (built in 1976) and the DOE 100-kW machines (designed in 1978 and erected in 1980-81) were essential in developing our analytic models. We continue to gain data from these machines but, in general, the data is well predicted by our current codes. This technology has been successfully transferred to industry, as evidenced by the number of companies now building or planning to build VAWTs in the 17-m size range.

Over the past few years, SNL has developed and tested a family of natural laminar flow (NLF) airfoils specifically designed for use on Darrieus-type (curved blade) VAWTs. These airfoils were designed to have a very low and wide drag bucket with abrupt stall characteristics to enable the VAWT to produce more power at low wind speeds (compared to VAWTs with NACA 00XX airfoils) and to flatten off the power curve at higher wind speeds. The family consists of symmetric airfoils 15%, 18%, and 21% thick (SAND 0015/47, SAND 0018/50, and SAND 0021/50, respectively), all with natural laminar flow (at zero angle of attack) over nearly the entire forward half of the airfoil. A comparison of the NACA 0018 profile with the Sandia-developed SAND 0018/50 laminar flow profile is made in Figure 1. Additional information on the design and testing of these airfoils may be found in the Klimas and Berg report.[1]

Figure 1. Comparison of NACA 0018 Airfoil Profile with SAND 0018/50

These NLF airfoils perform best at Reynolds numbers between 1 million and 5 million. At low Reynolds numbers, such as those encountered near the tower, the performance of the NLF airfoils is less satisfactory than that of airfoils in the NACA 00XX series. Thus, to make use of the NLF airfoils, we need to construct a blade with an NLF profile near the equator and a NACA 00XX profile near the tower. Aerodynamic and structural considerations show that we require a larger chord airfoil near the tower than at the equator, so we also need to consider a nonuniform chord (tapered) blade. We want to continue to use an extrusion process to fabricate our blades, and because it is difficult to extrude a blade with a nonuniform chord, we decided to consider the use of step-tapered blades with uniform chord blade sections between the step changes in chord length.

The potential economic advantages of using laminar flow airfoils and step-tapered blades have been investigated by Kadlec.[2] His work was based on experimental data for NACA 00XX airfoils and a combination of preliminary experimental and analytical data for the SAND 0018/50 and SAND 0021/50 NLF airfoils. Kadlec found that, with respect to a constant-chord NACA 0015 blade machine, a step-tapered blade machine using an NLF profile near the equator and a NACA 00XX profile near the tower would result in a significant decrease in the cost of energy (COE).

Preliminary work also indicated that the use of NLF airfoils may result in a sizable decrease in the magnitude of the lead/lag vibratory loads experienced by the turbine blades. Certainly, the cyclic loads in high winds will be reduced significantly, for these airfoils stall at a lower angle of attack, and the maximum lift and drag acting on them are less than the corresponding forces acting on a NACA 0015 blade. If these blades do actually decrease the vibratory loads, the blade lifetimes may be extended, resulting in a further decrease in the COE relative to a conventional VAWT.

Further studies have shown that a 34-m diameter turbine would enable us to investigate the full benefit of the tailored blade concept, for the potential advantages increase quite rapidly with size up to 34-m and

then level off. This size machine would also provide us with a new standard against which we could validate our structural and aerodynamic codes, a machine for which the gravitational and stochastic wind effects would be much more important than any we have to date.

Considerable interest has been expressed in the potential benefits of utilizing continuously variable-speed generators with wind turbines. With such a generator, the rotational speed of the turbine could be varied with wind speed to maximize energy capture. The only way to quantify any benefits that might be realized with variable-speed operation is to build a machine specifically designed to operate in such a mode, since no existing machine has an operating rpm range of any size that is free of resonances.

The Wind Energy Technology Division of the Department of Energy has funded Sandia National Laboratories to design and build a 34-m research VAWT. This machine will incorporate the tailored blade concept described above, be capable of continuously variable-speed operation, provide structural and aerodynamic data against which to validate our codes, and serve as a test bed for future VAWT research.

Design Tools

Throughout the design process we have maintained a strong interaction between the analytical tools and our experienced hardware designers, progressing through several sets of layout and conceptual drawings as the design evolved. Our computer codes help us evaluate design concepts from structural and economic standpoints, but the experienced designer is still indispensible.

The analytic design tools used in this effort comprised three computer programs: an economic analysis known as ECON16, a natural frequency analysis known as FEVD (for Finite Element VAWT Dynamics), and a forced vibrational response analysis known as FFEVD (for Forced Finite Element VAWT Dynamics). A short summary of each program follows.

ECON16

The design of a VAWT system must begin with the specification of many system variables such as rotor diameter, rotor height-to-diameter ratio, blade chord(s), number of blades, rotor speed, blade shape, and blade cross-section profile and design. Blade cross-section design, in turn, includes the number, location and thickness of ribs, the thickness of the blade skin, and the amount of fill in the nose and tail of the blade. The ECON16 code was developed at Sandia to aid in selecting optimal combinations of these and other system components.[3] It includes models for estimating the costs (in 1978 dollars) of major system elements and for estimating the total energy production of the system. ECON16 incorporates some major ground rules, including the following:

- Rotor to operate at constant rpm, controlled by the utility grid through a synchronous or induction generator
- Single rotating tower of tubular cross section, supported at the top by three guy cables
- Blade construction of constant cross section, thin-wall, hollow aluminum extrusions
- Optimization based on minimizing annual system cost per unit of energy supplied

The model assumes that any turbine that it analyzes has a 30-yr lifetime; it does not determine an anticipated lifetime or attribute an economic value to it.

FEVD

FEVD is a finite element code based on NASTRAN.[4] The code is described in detail by Lobitz[5] and Carne et al.[6] It requires a finite element model of the wind turbine including beam, rigid bar, spring, or concentrated mass elements with the appropriate three-dimensional properties. The model must accurately represent the tower constraints or supports (both top and bottom), the torsional stiffness of the drivetrain, and the presence of bearings (modeled as concentrated masses with appropriate element releases). In addition, the joint properties (blade-to-blade, tower-to-blade, and tower-to-tower) must be carefully determined. In some cases, one may need to construct a detailed three-dimensional model and analyze it extensively to determine appropriate joint stiffness for inclusion in the beam-type model. Our finite element model for the DOE 100-kW VAWT (Figure 2) is typical of the detail required. Moments of inertia and material properties must be specified for each element shown in the model, and the location of each grid point is required. A model may easily contain over 400 lines of variable specifications. The FEVD code computes the rotating system effects for this finite element model and generates the appropriate input data for the NASTRAN code. NASTRAN is then used to compute the system's natural frequencies and mode shapes. The variation of the rotor response with rotor rpm is illustrated in a "fan plot" (Figure 3) for the DOE 100-kW machine. Only a few of the lower frequency, more important modes are plotted in Figure 3. The name attached to each mode refers to its

shape at zero rpm; as the rotor rpm increases, the modes assume very complex shapes and it is difficult to label them. 1F is the first flatwise (symmetric and asymmetric) mode, 1Pr is the first propeller mode, 1B is the first butterfly mode, 1T is the first tower mode, $2F_A$ is the second flatwise asymmetric mode, etc. Some turbines contain two distinct tower modes characterized by the tower moving either in the plane of the blades (tower inplane, or TI) or perpendicular to the plane of the blades (tower out-of-plane, or TO). Illustrations of these mode shapes may be found in the Carne et al report.[6]

FFEVD

FFEVD is also a NASTRAN-based, finite element code. In fact, it uses the same finite element model of the VAWT that FEVD uses. FFEVD calculates the effects of the rotating system and estimates the rotationally resolved wind loading on each element of the turbine blades using a version of the double multiple streamtube aerodynamic code known as CARDAA.[7] The rotating system effects and wind loadings are added to the finite element model to create a NASTRAN input deck, and NASTRAN then calculates the turbine response to wind loading. The NASTRAN output is plotted as the mean and vibratory stress levels for each element in the model. Further information on FFEVD can be found in the Lobitz work.[8]

The CARDAA code includes the Gormont dynamic stall model,[9] modified with the Masse' correction.[10] This empirical dynamic stall model is summarized by Berg.[11] As implemented in FFEVD, this code includes the capability to analyze a machine whose blades contain step changes in airfoil chord length (up to six different chords) and in section profile (up to six different profiles).

CARDAA assumes a steady incident wind with a vertical gradient to model the earth's shear layer. We are fully aware that the incident wind is actually stochastic, with significant variations in both direction and velocity. We also know that as machines become larger, the relative size of typical atmospheric gusts or eddies becomes smaller than the size of the turbine, and the effect of a stochastic wind becomes greater. In fact, Lobitz[12] has recently shown that for the Mod 2 Horizontal-Axis Wind Turbine (HAWT), the stochastic wind must be included in the forced vibration model or a significant resonant problem is missed entirely. Preliminary investigations (with a single multiple streamtube code) indicate that these effects are less severe for VAWTs than they are for HAWTs, but they may still be important. A comparison of FFEVD results with experimental data[13] indicates that the code results (without a stochastic wind model) are quite conservative for the 17-m machine, but that is not to say that we will not see significant stochastic wind effects on a larger machine. We are currently working on a new aerodynamic code that incorporates a stochastic wind model, but completion is probably a couple years away.

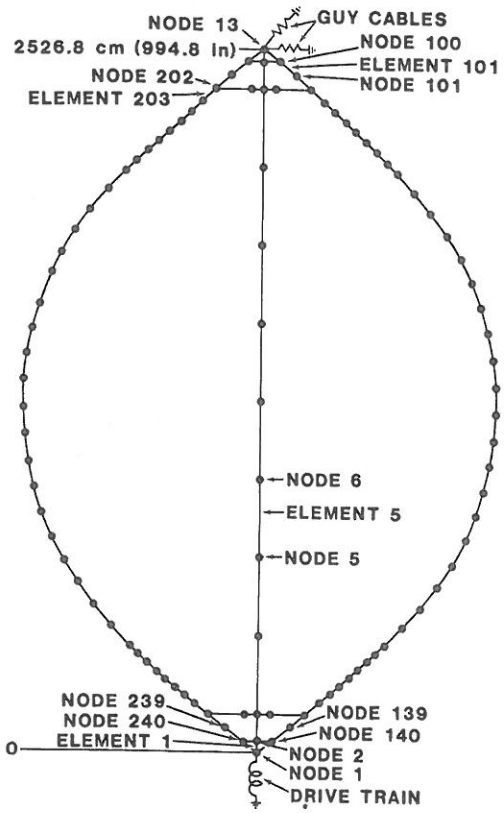

Figure 2. Finite Element Model of DOE 100-kW Turbine

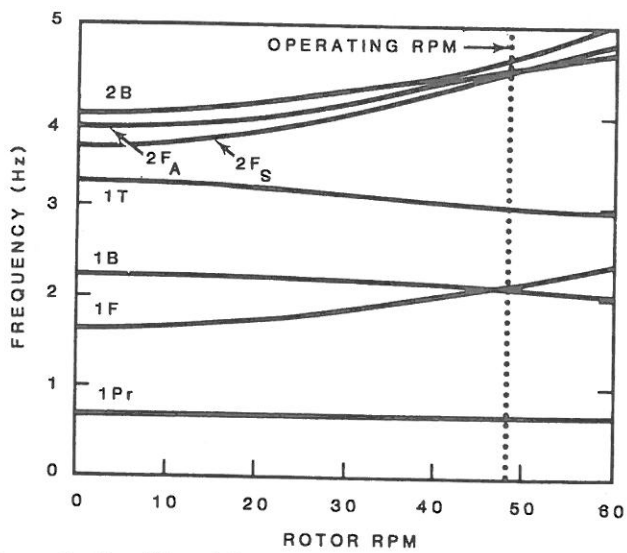

Figure 3. Fan Plot of Rotor Frequencies for DOE 100-kW Turbine

Design Process

Since this is to be a research machine, several special considerations must be incorporated into the design. The fact that we intend to use this machine to evaluate other blade designs in the future imposes the requirement of a very stiff tower design. The vibration modes and frequencies of a stiff tower are less sensitive to the exact blade design than a soft tower would be, and the design of new blades should be much easier with a stiff tower. The tower must also be designed to allow the blade/tower joint geometry to be readily changed, for new blades may well require different mounting angles. In addition, we will be investigating the potential advantages of a continuously variable-speed generator on this machine, so we cannot design it for operation at a single rpm; we must have a range of operating rpm in which the machine is free of resonant conditions.

Updated NLF experimental data have been included in the ECON16 model since it was used by Kadlec for his work,[2] which was expanded significantly during the basic design stage of this project. The basic procedure was to identify attractive configurations with the ECON16 program and then to evaluate their structural feasibility with the FEVD and FFEVD programs.

FEVD was used to determine the machine modes and frequencies of vibration as functions of rotational speed. The results were plotted as fan plots (Figure 4). Presentation of this data in this manner, overlaid with the harmonic lines of the rotation frequency, enables one to readily spot potential resonance problems. The intersection of these per-rev (P) frequencies and the natural rotor frequencies show where resonance problems could occur. Some of the modes are basically "odd" and will couple only with odd per-revs (1P, 3P, etc.), whereas others are "even" and will couple only with even per-revs (2P, 4P, etc.). For example, the first tower (1T) mode shown in the figure is an odd mode and will not be driven by 2P, 4P, etc. In addition, the higher per-revs (5P or above) do not contain sufficient energy, in general, to significantly drive a resonant condition. We have found that some mode crossings are very benign and may be safely ignored, whereas others are potentially catastrophic. Examples of the latter are the 1B/1P, the 1T/3P, and the $1F_S/2P$ crossings.

Once we located a potentially dangerous mode crossing, we used FFEVD to determine the anticipated rotor response both near the mode crossing and well away from it, where there should be no resonance. The mean and vibratory stress levels calculated by FFEVD indicated how badly the mode coupled with the driving frequency near the mode crossing (how bad the resonance was). If the mode coupled too strongly, we tried to alter the turbine design to shift the crossing out of the operating range. If the stress levels away from resonance were too high, we modified the design of turbine blade sections, or changed the basic design of the turbine to attempt to reduce those levels. After the necessary structural modifications had been incorporated into the model, we returned to the ECON16 code to reoptimize it.

Three design options were pursued throughout the basic design process. Each option is discussed in some detail below, and an evaluation follows.

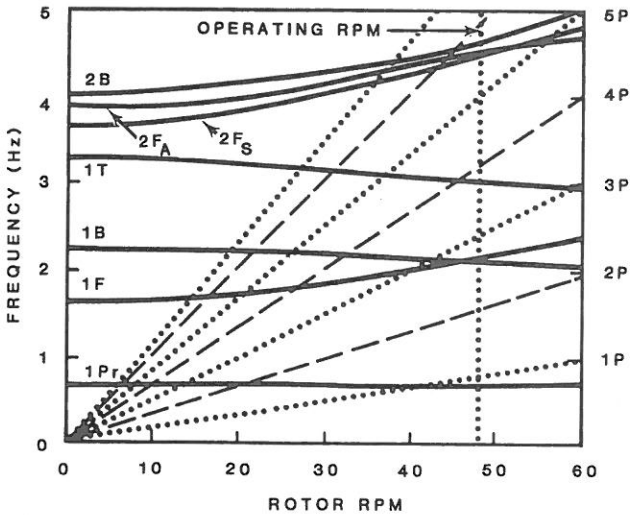

Figure 4. Fan Plot and System Driving Frequencies for DOE 100-kW Turbine

Option 1

This was the first design to be pursued, and we chose a conservative design with extremely rigid blades that would not need struts of any type. In Option 1, we wanted to design a machine that we were confident could be built, without paying too much attention to the comparative COE. We would then move on to alternate designs that would address COE. The ECON16 code and structural considerations both indicated that we should consider a step-tapered blade with a longer chord near the blade/tower support and a shorter chord near the equator. We tried to avoid any blade flatwise resonance problems in Option 1 by driving those frequencies above the lower per-rev driving frequencies. We also needed to keep the first TI mode above the 3P line throughout the operating range of ~27 to 42 rpm.

The results of our efforts are shown in the fan plot in Figure 5. We were unable to avoid a 1F crossing of the 3P line at 31 rpm, a 1B crossing of the 5P line at 35

rpm, and a $2F_A$ crossing of the 5P line at 34 rpm— all exhibiting some degree of resonance. The 1F/3P crossing defined the lower end of the operating range; the upper end was limited by the 1TI/3P crossing at 47 rpm. The crossings at 34 and 35 rpm meant that we could not operate the turbine close to these rates of rpm; therefore we had two small operating windows (31-33 and 37-44 rpm) rather than one large one. This design evolved into a machine having a height-to-diameter (H/D) ratio of 1.4, a 3.05-m (10-ft) diameter, a 0.95-cm (0.375-in.) wall steel tower, and a blade that had a 1.83-m (72-in.) chord NACA 0021 profile near the tower, a 1.07-m (42-in.) chord SAND 0021/50 profile in the intermediate region, and a 0.91-m (36-in.) chord SAND 0021/50 profile at the equator. The first column in Table 1 summarizes the characteristics of Option 1.

Table 1. Option Summary

	Option 1	Option 2	Option 3
Diameter, m (ft)	34 (110)	34 (110)	34 (110)
H/D	1.4	1.3	1.2
Operating Range, rpm	31-33	30-34	29-32
	37-44	36-42	36-42
Operating Mode	Variable Speed	Variable Speed	Variable Speed
Annual Energy, MWh	1.23	1.13	0.96
Airfoils			
Root	NACA 0021	NACA 0021	NACA 0018
Intermediate	SAND 21/50	SAND 18/50	SAND 18/50
Center	SAND 21/50	SAND 18/50	SAND 18/50
Chord, m (in.)			
Root	1.83 (72)	1.22 (48)	1.07 (42)
Intermediate	1.07 (42)	1.07 (42)	0.91 (36)
Center	0.91 (36)	0.91 (36)	0.76 (30)
Struts	None	Mini Rigid	Deep Cable
Solidity, %	15	12	10

All Options have a steel tower, 3.05 m (10 ft) in diameter, with a 0.95-cm (0.38-in.) thick wall.

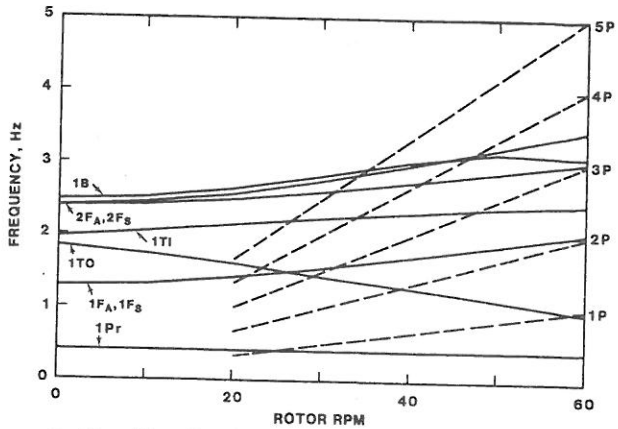

Figure 5. Fan Plot for Option 1

Option 2

With Option 2 we took a far less conservative approach than with Option 1. We did not like the large chord that evolved to meet the requirements of Option 1, so we decided Option 2 would use a smaller chord blade near the root and shallow rigid struts, if necessary. We sought to keep the struts near the blade-to-tower joints to minimize their effect on the aerodynamic performance of the machine. Our experience with deep rigid struts on our 17-m research turbine has made us very aware of how detrimental they can be. With a shallow strut and an arbitrarily imposed constraint that we would limit the chord of the blade at the root to 1.22 m (48 in.), we found we could not drive the blade 1F frequencies high enough to avoid the 3P frequency throughout the operating window. FFEVD indicated that the $1F_A$ mode would be driven by a 3P crossing, and the $1F_S$ mode would be driven by a 2P crossing. We elected to tailor the blade response to lie between the 2P and 3P lines throughout the operating window. We also shortened the tower to keep the 1TI mode from crossing the 3P line in the desired operating range.

Figure 6 shows the fan plot that resulted from our efforts on this design. As you can see, we ended up with a 1F crossing of the 3P line at 28 rpm, a 1B crossing of the 3P line at 35 rpm, and a 1TI crossing of the 3P line at 43 rpm. The 1F/3P crossing effectively defined the low end of the operating range; the 1TI crossing defined the upper end of that range. FFEVD indicated that the 1B/3P crossing was not a severe one, but we still would not want to operate right on top of it. Again, it effectively split our operating range and we had two small operating windows rather than one large one. This design evolved into a machine with an H/D ratio of 1.3 and a blade having a 1.22-m (48-in.) chord NACA 0021 profile at the root, a 1.07-m (42-in.)

chord SAND 0018/50 profile in the intermediate section, and a 0.91-m (36-in.) chord SAND 0018/50 profile at the equator. It used the same tower as Option 1 and shallow (0.9 m or 2.9 ft toward the equator from the blade-to-tower joints) rigid struts. Option 2 is summarized in the second column of Table 1.

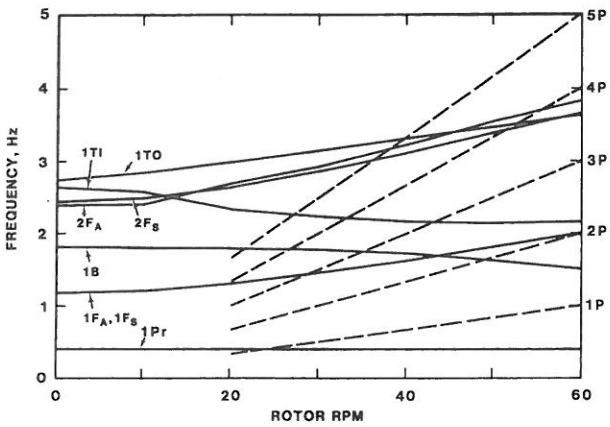

Figure 6. Fan Plot for Option 2

Option 3

Our philosophy in the design of Option 3 was to use blades that were soft in flatwise bending and to incorporate deep cable struts to boost the blade 1F frequencies above the 3P line. Cable struts seem to be far less detrimental than deep rigid struts to the aerodynamic performance of a turbine and have been used successfully in the past. We again had to shorten the tower to get the 1TI/3P crossing out of the desired operating range.

The Option 3 fan plot is shown in Figure 7. The cable struts did push the 1F modes up high enough that they did not cross the 2P or 3P lines in the operating range. The 1B crossing of the 3P line, however, was still a problem. FFEVD indicated that this crossing was much more severe for Option 3 than for Option 2, probably because the blades for Option 3 are less rigid in the lead/lag direction than the blades for Option 2. Once more, we ended up with two small operating windows rather than one large one. Option 3 was a turbine with a 1.2 H/D ratio and a blade having a 1.07-m (42-in.) chord NACA 0018 profile at the root, a 0.91-m (36-in.) chord SAND 0018/50 profile in the intermediate area, and a 0.76-m (30-in.) chord SAND 0018/50 profile at the equator. It also used the same tower as Option 1. Option 3 is summarized in the third column of Table 1.

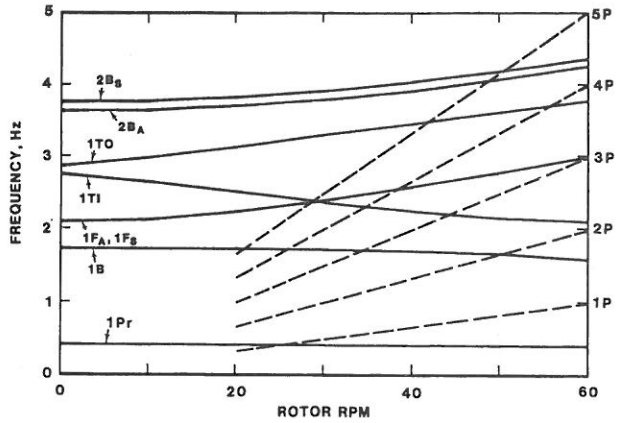

Figure 7. Fan Plot for Option 3

Evaluation

Once these conceptual designs were completed, we evaluated the three options we had developed in order to select one configuration that we would continue to work on. We compared the stress levels throughout the 25- to 42-rpm range, especially at the mode crossings within the desired operating window. We determined the operating windows that existed with those mode crossings and estimated how difficult it would be to eliminate the resonance problems, either by eliminating the crossing or by changing the structural design so the mode would not be so readily driven. We calculated the COE for each design, examined our modeling confidence for each of the three options, and estimated the difficulty of fabricating each of them.

Option 1 was eliminated rather quickly. Its COE was much higher than for the other two options, the large chord blade near the root would require at least three and possibly four extrusions and would be difficult to fabricate, and it would be difficult to move or control the resonant mode crossings within the desired operating window.

Options 2 and 3 had very comparable COE figures, and the fabrication difficulty appeared to be about the same. We felt, however, that the more severe 1B/3P resonance problem of Option 3 would be more difficult to mitigate, and we had greater confidence in the modeling of Option 2 with the rigid struts than we had in the modeling of Option 3 with the cable struts. Therefore, we selected the Option 2 configuration for further detailed design work.

Detailed Design

Once we selected Option 2 as the basic design with which we would continue, we got down to the real details of how, precisely, we would build this machine.

Exactly how would we attach the blade to the tower? How about blade-to-blade joints? How would we construct the blade from multiple extrusions? What would be the best tower-to-blade angles? These and a hundred more questions must be answered before a turbine is actually built. I will mention here some of the major features that we have established at this time.

After further design studies of Option 2, we decided to eliminate the struts completely, using more rigid tower-to-blade joints and longer blade clamps to control the blade flatwise frequencies. Sketches of the tower-to-blade joint are presented in Figure 8. The same design will be used for the upper and lower joints. These joints actually serve two functions: as transitions from the large torque tube to the smaller torque shafts that pass through the upper and lower bearings, and as mounts for the blade clamps. The blade clamps are attached to the transition flanges by plates on the leading and trailing ends of the clamps. The blade's mounting angle may be changed by simply replacing the existing plates with plates having clamp-mounting holes drilled for the desired angle. In addition, the use of other blade profiles or chords will require only the replacement of the blade clamps and mounting plates. The blade end of each blade clamp is tapered to decrease the stress concentration that will occur in the blade at the end of the clamp. By eliminating the struts and reworking this joint, we were able to drop the 1F/3P crossing from 28 to 26 rpm, thus expanding our operating window slightly.

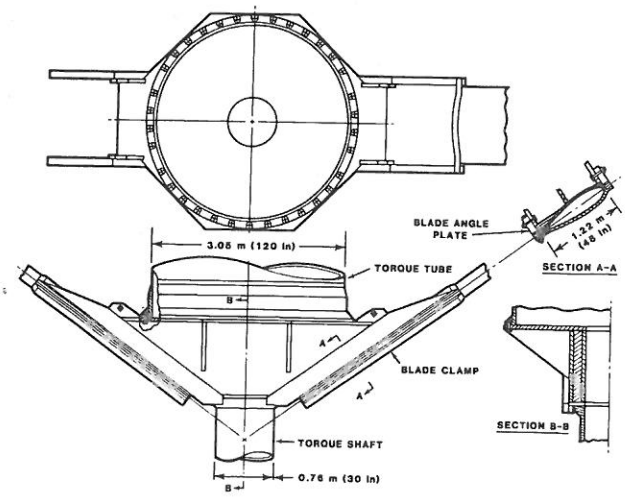

Figure 8. Blade-to-Tower Joint and Clamp

The blade-to-blade joint is illustrated in Figure 9. It is an external joint, similar to those we are currently using on our 17-m research turbine NLF blade. The sleeve portions of the joint will be extruded, bent to the proper shapes for each airfoil, and bolted securely to those airfoils. The two sleeves will then be attached to either side of a 7.6-cm (3.0-in.) interface plate. Although it is not shown in Figure 9, the area immediately on each side of that plate will be aerodynamically faired with nonstructural material. This type of joint is relatively cheap to fabricate, is easy to install, and will allow us to interchange blade sections readily. Wind tunnel and 17-m turbine tests indicate that external joints such as these do not seriously degrade the aerodynamic performance of the machine.

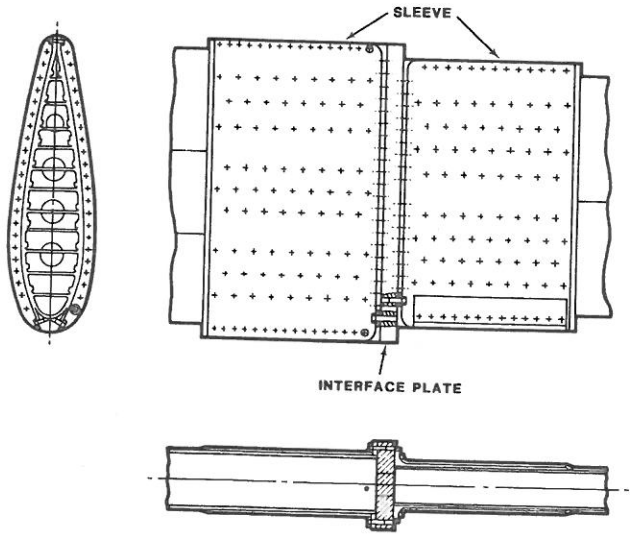

Figure 9. Blade-to-Blade Joint

The blade sections will be constructed of multiple extrusions (Figure 10). The maximum size of each extrusion is limited by the size of the extruding press available; the largest single extrusion blade that can be fabricated today is ~0.74 m (29 in.) in chord. The 1.22-m (48-in.) chord NACA 0021 blade profile shown in this figure will be fabricated from three extrusions, all with 0.79-cm (0.31-in.) wall and rib thicknesses. The 1.07-m (42-in.) and 0.91-m (36-in.) chord SAND 0018/50 blade sections will use two extrusions each, with 0.64-cm (0.25-in.) wall and rib thicknesses. The nose of each blade section is 1.27 cm (0.50 in.) thick, and the tail is filled, as illustrated in the drawing. Current plans call for the extrusions to be bolted together, but we are not irrevocably committed to that method.

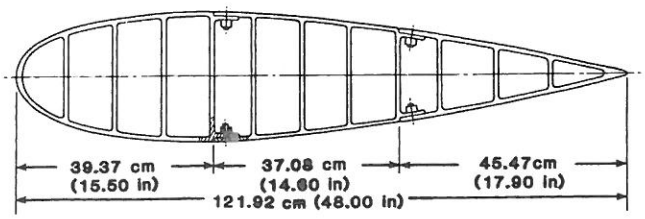

Figure 10. Construction of a 1.22-m Chord NACA 0021 Airfoil Section

We have elected to use an aluminum tower 3.05 m (10 ft) in diameter, with a 1.27-cm (0.50-in.) wall, rather than the steel tower we developed for the conceptual design. The aluminum tower will allow us to reduce the stiffness of the guy cable by 25% and still keep the first tower inplane mode at the desired level. In addition, the difference in the coefficient of thermal expansion for aluminum and steel, combined with the 2-to-1 difference in lengths of the steel cables and aluminum tower, will result in much smaller temperature-induced cable tension changes than we would see with a steel tower.

To obtain the necessary stiffness at the upper bearing of 78 810 N/cm (45 000 lb/in.), we will use three 8.9-cm (3.5-in.) diameter guy cables ~90 m (295 ft) long. The size of these cables mandates the use of hydraulic tensioning devices for each cable, but once proper tension is obtained it will be maintained by a mechanical device. We must keep the natural guy cable frequency above the 2P turbine driving frequency at all rotational speeds to avoid cable resonance. The cable tension necessary to obtain such frequencies for cables of this size is excessive (595 000 lb per cable). To reduce the cable tension required, we intend to use cable anchors to force a cable node one-third of the way up the cable and to utilize active cable damping. These details will be worked out as the design progresses.

The upper bearing design is shown in Figure 11. The upper plate on the bearing housing is designed to accept 3, 4, 6, or 12 guy cables, although the current configuration calls for the use of 3. The vertical load caused by cable tension is carried by the thrust bearing at the bottom of the bearing assembly, whereas the radial loads are distributed between the lower bearing and the upper radial bearing.

The rotor base is a simple design with four angled legs and single braces on each side. The top plate is a 10.2-cm (4.0-in.) thick steel plate upon which the lower rotor bearing and the disk brake calipers are mounted. The entire weight of the rotor and the vertical load caused by guy cable tension is borne by the lower rotor bearing. The ground-level, right-angle transmission does not bear any vertical load. The current base design places the lower rotor bearing 4.8 m (15.8 ft) above ground level, which provides clearance between it and the transmission for two sets of slip rings (a total of 100 channels), a torque sensor, and two elastomeric couplings to protect the torque sensor. The instrumentation lines will be run from the slip rings inside the blades and will be brought to the outside at the blade joint near where the lines are required.

Figure 12 is a fan plot of the current design. It is only slightly changed from the one in Option 2 (Figure 6), with the 1F and 2F lines a little lower as a result of the changes in the tower/blade joint design. The 1F/3P crossing, which defines the lower end of the operating range, is now at 26 rpm, the 1B/3P crossing is at 34 rpm, and the 1TI/3P crossing is at 45 rpm. NASTRAN does not predict a severe resonance at 34 rpm, but unless we see a very light resonance during actual operation we will be restricted to the use of two small operating windows (28-33 and 35-43 rpm) rather than the one large window that we would like.

Our current design has a rated power of 480 kW in a 12-m/s (27-mph) wind at 37.5 rpm and an estimated annual energy output of 1.15×10^6 kWh (based on a mean wind speed of 6 m/s and a Rayleigh wind speed distribution). The turbine cutout wind speed is 20 m/s (45 mph). An artist's conception of the 34-m test bed is presented in Figure 13.

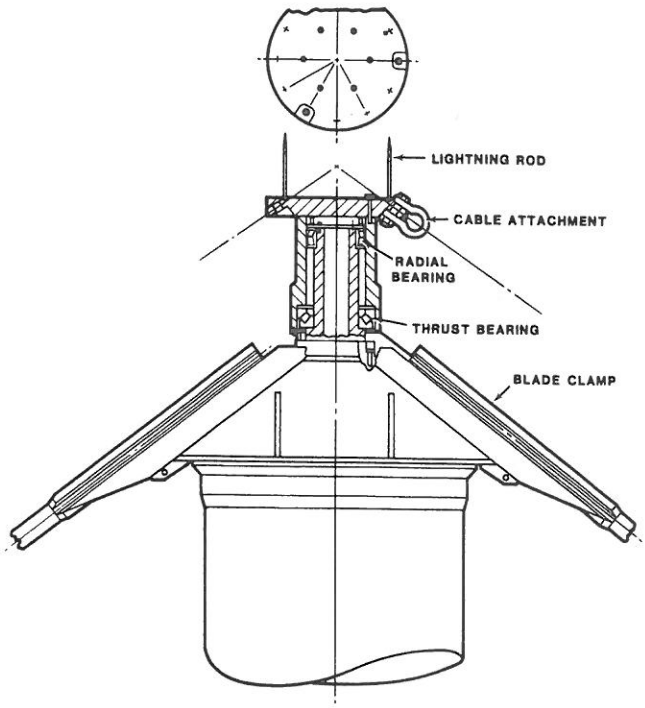

Figure 11. Upper Bearing Design

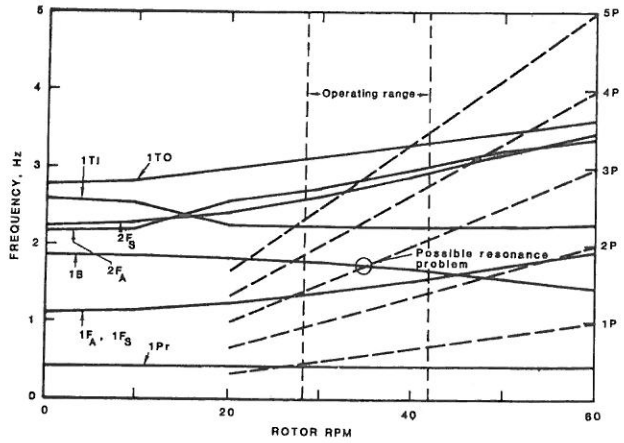

Figure 12. Fan Plot for the Test Bed

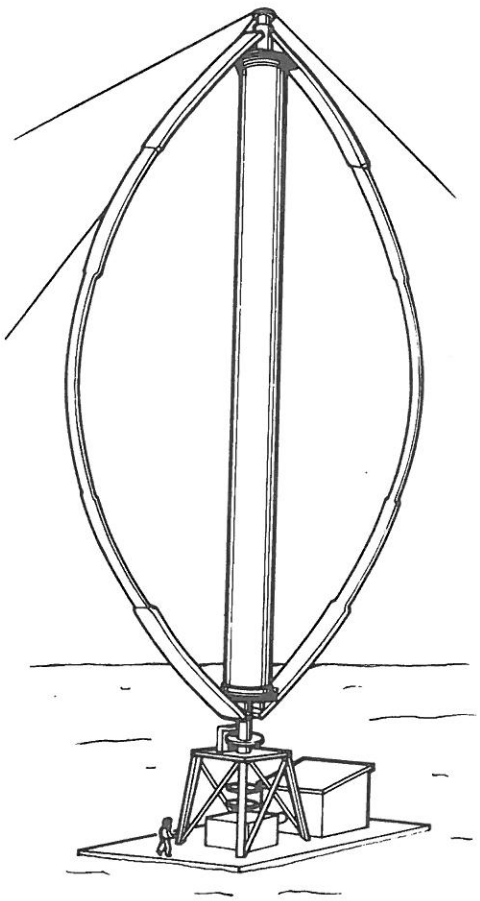

Figure 13. Artist's Conception of Sandia's 34-m Test Bed

Although our test plan has not been worked out in detail at this time, the general procedure has been established. We will instrument the blades, joints, and tower with approximately 75 strain gages to allow us to determine the local and global stress distributions for the turbine. Some gages will be placed to detect maximum stress levels and to determine stress concentration details. These will be used to spot potential problem areas. Other gages will be placed to yield data that can be directly compared with our code results. A torque sensor on the low-speed shaft will be used to measure the rotor torque and to determine the aerodynamic performance of the machine. We will conduct modal tests of various sections of the machine during construction and of the full machine prior to first turn. The results of these tests will be used to fine-tune our finite element model to match the actual machine. We will start operating the turbine at selected fixed speeds to characterize the machine responses. At each speed we will seek overall performance data as well as stress data from all of our gages. We will pay particular attention to operating speeds in the vicinity of the 1B/3P mode crossing, where we anticipate a resonance condition. Once we have adequately characterized the machine in the fixed-speed mode, we will develop operating algorithms to operate in a continuously variable-speed mode in each of the anticipated operating windows. Finally, we will develop an algorithm to allow us to operate in a continuously variable-speed mode over the entire operating range, excluding only the rpm band around the 1B/3P crossing. If 1B/3P resonance is a mild one, we may not have to exclude that speed from our operating range.

We currently plan to let contracts on the turbine blades and transmission (the long lead time items) early in calender year 1985; contracts for the rest of the equipment will follow throughout 1985. Erection and first turn of the test bed should occur sometime in 1986 at a site to be selected by the DOE Wind Energy Technology Division.

Summary

Sandia National Laboratories is currently performing detailed design studies for a research-oriented, 34-m diameter, Darrieus-type Vertical-Axis Wind Turbine. This work is a continuation of the conceptual design stage completed in May 1984, in which we looked at three potential VAWT configurations. Our primary analytic tools during these design studies have been the Sandia-developed ECON16, FEVD, and FFEVD codes. All three VAWT configurations investigated during the conceptual design

stage incorporated a 3.05-m (10-ft) diameter steel tower and step-tapered blades with NLF sections near the turbine equator. The main features of the three options are summarized in Table 1.

After evaluating these options, we elected to continue our detailed design phase with Option 2.

A detailed design of the turbine is currently underway, and the machine will continue to evolve as the design progresses. The current design includes the following features:

- A 3.05-m (10-ft) diameter aluminum tower with a 1.27-cm (0.50-in.) wall
- An H/D ratio of 1.3
- Continuous variable-speed operation
- No struts
- External blade-to-blade joints
- SAND 0018/50 blade section near the equator
- NACA 0021 blade section near the tower
- Multiple extrusion blade profiles

We anticipate the completion of fabrication and the start of testing sometime in calendar year 1986.

References

[1]P. C. Klimas and D. E. Berg, "Aerodynamic Design of a Midsized Vertical Axis Wind Turbine Using Natural Laminar Flow Blade Elements," *Proceedings of the Sixth Biennial Wind Energy Conference and Workshop* (American Solar Energy Society, Inc., June 1983) pp 239-48.

[2]E. G. Kadlec, "The Potential of Advanced Darrieus Wind Turbines," *Proceedings of the Sixth Biennial Wind Energy Conference and Workshop* (American Solar Energy Society, Inc., June 1983) pp 213-18.

[3]W. N. Sullivan, *Economic Analysis of Darrieus Vertical Axis Wind Turbine Systems for the Generation of Utility Grid Electrical Power, Volume II—The Economic Optimization Model*, SAND78-0962 (Albuquerque, NM: Sandia National Laboratories, August 1979).

[4]*MSC/NASTRAN User's Manual*, Vol I and II (Los Angeles, CA: MacNeal-Schwendler Corp., 1981).

[5]D. W. Lobitz, *Dynamic Analysis of Darrieus Vertical Axis Wind Turbine Rotors*, SAND80-2820 (Albuquerque, NM: Sandia National Laboratories, May 1981).

[6]T. G. Carne et al, *Finite Element Analysis and Modal Testing of a Rotating Wind Turbine*, SAND82-0345 (Albuquerque, NM: Sandia National Laboratories, October 1982).

[7]I. Paraschivoiu, "Aerodynamic Loads and Performance of the Darrieus Rotor," *Journal of Energy*, 6(6):406 (1982).

[8]D. W. Lobitz, "Forced Vibration Analysis of Rotating Structures with Application to Vertical Axis Wind Turbines," *Proceedings of the Fifth Biennial Wind Energy Conference and Workshop*, SERI/CP-635-1340, Vol III (Golden, CO: Solar Energy Research Institute, October 1981).

[9]R. E. Gormont, "A Mathematical Model of Unsteady Aerodynamics and Radial Flow for Application to Helicopter Rotors," *USAAMRDL Technical Report 72-67* (Fort Eustis, VA: US Army Air Mobility R&D Laboratory, May 1973).

[10]B. Masse', *Description de Deux Programmes d'Ordinateur Pour le Caleul des Performance et des Charges Axe Vertical*, IREQ-2379 (Varennes, Quebec, Canada: Institut de Recherche d'Hydro-Quebec, July 1981).

[11]D. E. Berg, "Recent Improvements to the VDART3 VAWT Code," *Proceedings of the 1983 Wind and Solar Energy Technology Conference* (Columbia, MO: Wind/Solar Proceedings Engineering Extension, College of Engineering, University of Missouri—Columbia, April 1983) pp 31-41.

[12]D. W. Lobitz, "A NASTRAN-Based Computer Program for Structural Dynamic Analysis of Horizontal Axis Wind Turbines" (presented at the NASA/DOE Workshop on Horizontal Axis Wind Turbine Technology, Cleveland, OH, 8-10 May 1984).

[13]D. W. Lobitz and W. N. Sullivan, *A Comparison of Finite Element Predictions and Experimental Data for the Forced Response of the DOE 100-kW Vertical Axis Wind Turbine*, SAND82-2534 (Albuquerque, NM: Sandia National Laboratories, February 1984).

DISTRIBUTION:

Aerolite, Inc.
Attn: R. K. St. Aubin
550 Russells Mills Rd.
South Dartmouth, MA 02748

Aluminum Company of America (5)
Technical Center
Attn: D. K. Ai
J. T. Huang
J. R. Jombock
Marshall Klingensmith
J. L. Prohaska
Alcoa Center, PA 15069

Alternative Sources of Energy
Attn: Larry Stoiaken
Milaca, MN 56353

Amarillo College
Attn: E. Gilmore
Amarillo, TX 79100

American Wind Energy Assn.
1516 King St.
Alexandria, VA 22314

Arizona State University
University Library
Attn: M. E. Beecher
Tempe, AZ 85281

R. G. Richards
Atlantic Wind Test Site
PO Box 189
Tignish P.E.I., COB 2BO
CANADA

Battelle-Pacific Northwest Laboratory
Attn: Larry Wendell
PO Box 999
Richland, WA 99352

National Technical University
Dept. of Mechanical Engineering
Attn: Dr. G. Bergeles
42, Patission Street
Athens, GREECE

Bonneville Power Administration
Attn: N. Butler
PO Box 3621
Portland, OR 97225

Burns & Roe, Inc.
Attn: G. A. Fontana
800 Kinderkamack Rd.
Oradell, NJ 07649

Tom Watson
Canadian Standards Assn.
178 Rexdale Blvd.
Rexdale, Ontario, M9W 1R3
CANADA

University of Auckland
School of Engineering
Attn: V. A. L. Chasteau, Prof.
Private Bag
Auckland, NEW ZEALAND

Colorado State University
Dept. of Civil Engineering
Attn: R. N. Meroney
Fort Collins, CO 80521

Commonwealth Electric Co.
Attn: D. W. Dunham
Box 368
Vineyard Haven, MA 02568

Gale B. Curtis
Curtis Associates
3089 Oro Blanco Dr.
Colorado Springs, CO 80917

M. M. Curvin
11169 Loop Rd.
Soddy Daisy, TN 37379

Department of Economic Planning and Development
Attn: G. N. Monsson
Barrett Building
Cheyenne, WY 82002

Otto de Vries
National Aerospace Laboratory
Anthony Fokkerweg 2
Amsterdam 1017
THE NETHERLANDS

Department of Energy
Attn: G. P. Tennyson
Albuquerque, NM 87115

DISTRIBUTION (cont):

Department of Energy
Attn: Capt. J. L. Hanson, USAF
Energy Technology Liaison Office
NGD
Albuquerque, NM 87115

Department of Energy (20)
Attn: D. F. Ancona (19)
P. Goldman
1000 Independence Ave.
Washington, DC 20585

Dominion Aluminum Fabricating, Ltd. (2)
Attn: L. Schienbein
C. Wood
3570 Hawkestone Rd.
Mississauga, Ontario, L5C 2V8
CANADA

J. B. Dragt
Nederlands Energy Research Foundation
(E.C.N.)
Physics Dept.
Westerduinweg 3 Petten (nh)
THE NETHERLANDS

Dynergy Systems Corp.
Attn: C. Fagundes
821 West L St.
Los Banos, CA 93635

Dr. Norman E. Farb
10705 Providence Dr.
Villa Park, CA 92667

Electric Power Research Institute (2)
Attn: E. Demeo
F. Goodman
3412 Hillview Ave.
Palo Alto, CA 94304

Alcir de Faro Orlando
Pontificia Universidade Catolica-PUC/Rj
Mechanical Engineering Dept.
R. Marques de S. Vicente 225
Rio de Janeiro, BRAZIL

FloWind Corp. (4)
Attn: H. M. Drees
S. Tremoulet
I. E. Vas
R. Watson
214 68th Ave. South
Kent, WA 98031

Gates Learjet
Mid-Continent Airport
Attn: G. D. Park
PO Box 7707
Wichita, KS 67277

H. Gerardin
Mechanical Engineering Dept.
Faculty of Sciences and Engineering
Universite Lavel-Quebec, G1K 7P4
CANADA

R. T. Griffiths
University College of Swansea
Dept. of Mechanical Engineering
Singleton Park
Swansea, SA2 8PP
UNITED KINGDOM

Helion, Inc.
Attn: J. Park, President
Box 445
Brownsville, CA 95919

Institut de Recherche d'Hydro-Quebec (2)
Attn: Gaston Beaulieu
Bernard Masse'
1800, Monteé Ste-Julie
Varennes, Quebec, JOL 2PO
CANADA

Iowa State University
Agricultural Engineering, Rm. 213
Attn: L. H. Soderholm
Ames, IA 50010

Kaiser Aluminum and Chemical Sales, Inc.
Attn: A. A. Hagman
14200 Cottage Grove Ave.
Dolton, IL 60419

DISTRIBUTION (cont):

Kaiser Aluminum and Chemical Sales, Inc.
Attn: D. D. Doerr
6177 Sunol Blvd.
PO Box 877
Pleasanton, CA 94566

Kaman Aerospace Corp.
Attn: W. Batesol
Old Windsor Rd.
Bloomfield, CT 06002

Kansas State University
Electrical Engineering Dept.
Attn: G. L. Johnson
Manhattan, KS 66506

R. E. Kelland
The College of Trades and Technology
PO Box 1693
Prince Philip Dr.
St. John's, Newfoundland, A1C 5P7
CANADA

KW Control Systems, Inc.
Attn: R. H. Klein
RD#4, Box 914C
South Plank Rd.
Middletown, NY 10940

Kalman Nagy Lehoczky
Cort Adelers GT. 30
Oslo 2, NORWAY

L. Liljidahl
Bldg. 005, Rm. 304
Barc-West
Beltsville, MD 20705

Ole Ljungstrom
FFA, The Aeronautical Research Institute
Box 11021
S-16111 Bromma, SWEDEN

R. Lynette & Assoc., Inc.
Attn: R. Lynette
15921 SE 46th Way
Bellevue, WA 98006

Massachusetts Institute of Technology (2)
Attn: N. D. Ham, Prof.
W. L. Harris, Aero/Astro Dept.
77 Massachusetts Ave.
Cambridge, MA 02139

H. S. Matsuda
Composite Materials Laboratory
Pioneering R&D Laboratories
Toray Industries, Inc.
Sonoyama, Otsu, Shiga
JAPAN 520

Michigan State University
Div. of Engineering Research
Attn: O. Krauss
East Lansing, MI 48825

Napier College of Commerce and Technology
Tutor Librarian, Technology Faculty
Colinton Road
Edinburgh, EH10 5DT
ENGLAND

NASA Lewis Research Center (2)
Attn: D. Baldwin
J. Savino
21000 Brookpark Rd.
Cleveland, OH 44135

National Rural Electric Cooperative Assn.
Attn: W. Prichett III
1800 Massachusets Ave. NW
Washington, DC 20036

Natural Power, Inc.
Attn: L. Nichols
New Boston, NH 03070

Northwestern University
Dept. of Civil Engineering
Attn: R. A. Parmalee
Evanston, IL 60201

Ohio State University
Aeronautical and Astronautical Dept.
Attn: G. Gregorek, Prof.
2070 Neil Ave.
Columbus, OH 43210

DISTRIBUTION (cont):

Oklahoma State University
Mechanical Engineering Dept.
Attn: D. K. McLaughlin
Stillwater, OK 76074

Oregon State University (2)
Mechanical Engineering Dept.
Attn: R. W. Thresher
R. E. Wilson
Corvallis, OR 97331

Pacific Gas & Electric
Attn: T. Hillesland
3400 Crow Canyon Rd.
San Ramon, CA 94583

Ion Paraschivoiu
Dept. of Mechanical Engineering
Ecole Polytecnique
CP 6079
Succursale E
Montreal H3C 3A7
CANADA

Riso National Laboratory (2)
Attn: Troels Friis Pedersen
Helge Petersen
Postbox 49
DK-4000 Roskilde
DENMARK

The Power Company, Inc.
Attn: A. A. Nedd
PO Box 221
Genesee Depot, WI 53217

Power Technologies Inc.
Attn: Eric N. Hinrichsen
PO Box 1058
Schenectady, NY 12301-1058

Public Service Co. of New Hampshire
Attn: D. L. C. Frederick
1000 Elm St.
Manchester, NH 03105

Public Service Co. of New Mexico
Attn. M. Lechner
PO Box 2267
Albuquerque, NM 87103

RANN, Inc.
Attn: Alfred J. Eggers, Jr.
260 Sheridan Ave., Suite 414
Palo Alto, CA 94306

Renewable Energy Ventures
Attn: G. W. Stricker
190 South King St., Sta. 2460
Honolulu, HI 96813

The Resources Agency
Dept. of Water Resources Energy Division
Attn: R. G. Ferreira
PO Box 388
Sacramento, CA 95802

Reynolds Metals Co.
Mill Products Div.
Attn: G. E. Lennox
6601 West Broad St.
Richmond, VA 23261

Memorial University of Newfoundland
Faculty of Engineering and Applied Sciences
Attn: A. Robb
St. John's, Newfoundland, A1C 5S7
CANADA

Rockwell International (2)
Rocky Flats Plant
Attn: A. Trenka
PO Box 464
Golden, CO 80401

Dr. Ing. Hans Ruscheweyh
Institut fur Leichbau
Technische Hochschule Aachen
Wullnerstrasse 7
FEDERAL REPUBLIC OF GERMANY

Beatrice de Saint Louvent
Establissement d'Etudes et de
Recherches Meteorologigues
77 rue de Serves
92106 Bouloigne-Billancourt Cedex
FRANCE

National Atomic Museum
Attn: G. Schreiner, Librarian
Albuquerque, NM 87185

DISTRIBUTION (cont):

Technion-Israel Institute of Technology
Department of Aeronautical Engineering
Attn: A. Seginer
Professor of Aerodynamics
Haifa, ISRAEL

Queen Mary College
Dept. of Aeronautical Engineering
Attn: D. Sharpe
Mile End Rd.
London, E1 4NS
UNITED KINGDOM

Instituto Technologico Costa Rico
Attn: K. Smith
Apartado 159 Cartago
COSTA RICA

Solar Initiative
Citicorp Plaza, Suite 900
Attn: J. Yudelson
180 Grand Ave.
Oakland, CA 94612

Bent Sorenson
Roskilde University Center
Energy Group, Bldg. 17.2
IMFUFA
PO Box 260
DK-400 Roskilde
DENMARK

South Dakota School of Mines and Technology
Dept. of Mechanical Engineering
Attn: E. E. Anderson
Rapid City, SD 57701

Southern California Edison
Research & Development Dept., Rm. 497
Attn: R. L. Scheffler
PO Box 800
Rosemead, CA 91770

Southern Illinois University
School of Engineering
Attn: C. W. Dodd
Carbondale, IL 62901

The University of Reading
Dept. of Engineering
Attn: G. Stacey
Whiteknights, Reading, RG6 2AY
ENGLAND

Stanford University
Dept. of Aeronautics and Astronautics
Mechanical Engineering
Attn: H. Ashley
Stanford, CA 94305

Low-Speed Aerodynamics Laboratory (3)
NRC-National Aeronautical Establishment
Attn: R. J. Templin
Montreal Rd.
Ottawa, Ontario, K1A OR6
CANADA

Texas Tech University (2)
Mechanical Engineering Dept.
Attn: J. W. Oler
J. Strickland
PO Box 4389
Lubbock, TX 79409

Tulane University
Dept. of Mechanical Engineering
Attn: R. G. Watts
New Orleans, LA 70018

Tumac Industries, Inc.
Attn: J. R. McConnell
650 Ford St.
Colorado Springs, CO 80915

Air Force Systems Command (AFSC)
Aerospace Power Division/Aero Propulsion Lab
Attn: J. M. Turner
Terrestrial Energy Technology Program Office
Energy Conversion Branch
Wright-Patterson Air Force Base, OH 45433

United Engineers and Constructors, Inc.
Attn: A. J. Karalis
PO Box 8223
Philadelphia, PA 19101

DISTRIBUTION (cont):

University of Alaska
Geophysical Institute
Attn: T. Wentink, Jr.
Fairbanks, AK 99701

University of California
Institute of Geophysics and Planetary Physics
Attn: P. J. Baum
Riverside, CA 92521

University of Colorado
Dept. of Aerospace Engineering Sciences
Attn: J. D. Fock, Jr.
Boulder, CO 80309

University of Massachusetts
Mechanical and Aerospace Engineering Dept.
Attn: D. E. Cromack
Amherst, MA 01003

University of New Mexico
NM Engineering Research Institute
Attn: G. G. Leigh
Campus PO Box 25
Albuquerque, NM 87131

University of Oklahoma
Aero Engineering Dept.
Attn: K. Bergey
Norman, OK 73069

University of Sherbrooke
Faculty of Applied Science
Attn: R. Camerero
Sherbrooke, Quebec, J1K 2R1
CANADA

University of Tennessee
Dept. of Electrical Engineering
Attn: T. W. Reddoch
Knoxville, TN 37916

USDA, Agricultural Research Service
Southwest Great Plains Research Center
Attn: R. N. Clark
Bushland, TX 79012

Utah Power and Light Co.
Attn: K. R. Rasmussen
51 East Main St.
PO Box 277
American Fork, UT 84003

W. A. Vachon & Associates
Attn: W. A. Vachon
PO Box 149
Manchester, MA 01944

VAWTPOWER, Inc.
Attn: P. N. Vosburgh
134 Rio Rancho Dr.
Rio Rancho, NM 87124

Washington State University
Dept. of Electrical Engineering
Attn: F. K. Bechtel
Pullman, WA 99163

West Texas State University
Government Depository Library
Number 613
Canyon, TX 79015

West Texas State University
Dept. of Physics
Attn: V. Nelson
PO Box 248
Canyon, TX 79016

West Virginia University
Dept. of Aero Engineering
Attn: R. Walters
1062 Kountz Ave.
Morgantown, WV 26505

Central Lincoln People's Utility District
Attn: D. Westlind
2129 North Coast Highway
Newport, OR 97365-1795

Wichita State University (2)
Aero Engineering Dept.
Attn: M. Snyder
W. Wentz
Wichita, KS 67208

Wind Energy Report
Attn: F. S. Seiler
Box 14
102 S. Village Ave.
Rockville Centre, NY 11571

DISTRIBUTION (cont):

Wind Power Digest
Attn: Michael Evans
PO Box 700
Bascom, OH 44809

Wisconsin Div. of State Energy
Attn: Wind Program Manager
101 South Webster St., 8th Floor
Madison, WI 53702

1520	D. J. McCloskey
1522	R. C. Reuter, Jr.
1523	J. H. Biffle
1524	D. W. Lobitz
1524	W. N. Sullivan
1600	R. G. Clem
1630	R. C. Maydew
1636	J. K. Cole
2525	R. P. Clark
3160	J. E. Mitchell (15)
3161	P. S. Wilson
6000	E. H. Beckner
6200	V. L. Dugan
6220	D. G. Schueler
6225	T. D. Ashwill
6225	D. E. Berg (10)
6225	H. M. Dodd (50)
6225	R. D. Grover
6225	E. G. Kadlec
6225	P. C. Klimas
6225	T. Leonard
6225	M. T. Mattison
6225	R. O. Nellums
6225	D. S. Oscar
6225	M. E. Ralph
6225	M. H. Worstell
7111	J. W. Reed
7544	T. G. Carne
7544	J. Lauffer
7544	D. R. Schafer
8024	M. A. Pound
3141	C. M. Ostrander (5)
3151	W. L. Garner
3154-3	C. H. Dalin (28)
	For DOE/TIC (Unlimited Release)

Org.	Bldg.	Name	Rec'd by	Org.	Bldg.	Name	Rec'd by
1524		Lobitz					

Sandia National Laboratories