Supercritical CO_2 - Brayton Cycle

What is Supercritical CO_2?

Supercritical CO_2 is a fluid state of carbon dioxide where it is held above its critical pressure and critical temperature, which causes the gas to go beyond liquid or gas into a phase where it acts as both simultaneously. Many fluids can achieve supercritical states, and supercritical steam has been used in power generation for decades. Supercritical CO_2 has many unique properties that allow it to dissolve materials like a liquid but also flow like a gas.

The Sandia Solution

Sandia National Laboratories (SNL) is creating a thermal-to-electric power conversion technology in a configuration called the recompression closed Brayton cycle (RCBC) that uses supercritical carbon dioxide (sCO_2) as the working fluid, rather than steam, thereby dramatically increasing conversion efficiency compared to the steam Rankine cycle.

The primary reason for improved efficiency is that a sensible temperature difference between the hot turbine discharge and the cold compressor discharge drives heat transfer within the cycle, which provides the vast majority of the heat addition to the high-pressure fluid. **The heat rejected while condensing steam at constant temperature in a Rankine cycle is avoided**. While this process of internal heat recuperation applies to any gaseous working fluid, sCO_2 remains relatively incompressible and dense at normal atmospheric temperatures. Therefore, the low temperature condition in the cycle that minimizes the work of compression is easily and cheaply achieved.

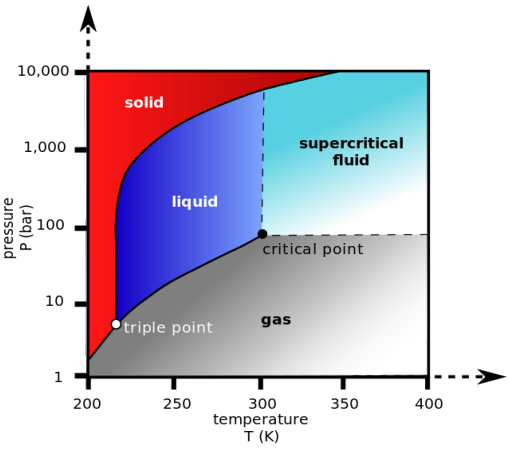

Critical Point: 304 K = 31 C
73.8 bar = 7.38 MPa

Benefits

sCO_2 power conversion technology offers a number of benefits over competing cycles including:

- Economic advantages
- Smaller size relative to steam system – reduced capital cost
- Increased efficiency – increased electricity production for same thermal input – lower cost of electricity ($/kWhr)
- Environmental improvement
- Greenhouse gas reduction
- Vastly reduces water consumption
- Dry cooling/suitable for arid environments

OUR MISSION

By the end of FY 19 Sandia will develop, with industry, a fully operational 550 ˚C, 10 MW_e R&D Demonstration sCO_2 Brayton Power Conversion System that will allow the research team to systematically identify and retire technical risks and test components for the commercial application of this technology.

Challenges

- Confirm viability of existing components (bearings and gas seals) and suitability of materials
- Accommodate a wide range of operating parameters and applications
- Integrate and scale up existing technologies into a new application
- Develop robust operating procedures for operating at critical point

Future Applications

sCO_2 power cycles are potentially applicable to a wide variety of power-generation applications. Nuclear power, concentrated solar thermal, fossil fuel boilers, geothermal, and shipboard propulsion systems have all been identified as favorable applications for sCO_2 cycles

Closed Brayton Cycle

- The first closed Brayton cycle power plant was built in 1939 in Germany. The power plant used air instead of sCO_2.
- In 2007, Sandia took the lead in investigating this cycle using LDRD funds. Initial investigations focused on the stability of sCO_2 as a working fluid very near the fluid's critical point.
- SNL had the first and only known closed-loop recompression sCO_2 Brayton cycle in the world, making it a unique and valuable testing system.
- The current testing configuration consists of:
  - 2 Turbine-Alternator-Compressors designed to produce 125 kW of electricity each.
  - A bank of heaters with 780 kW capacity.
  - 2 recuperators to transfer heat from the high-temperature flow exiting the turbine to the low-temperature flow exiting the compressors, and a heat-rejection heat exchanger.

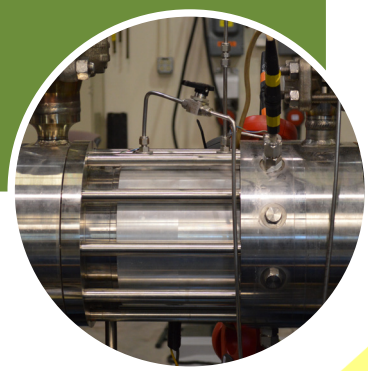

For more information please contact:
Tito Bonano
E-mail: ejbonan@sandia.gov
Phone: (505) 844-9720
Website: brayton.sandia.gov

and would replace traditional steam Brayton and Rankine cycles.

Solar Driven Supercritical CO_2 Power Cycle

Concentrating solar power (CSP) plants face two big challenges (1) increasing the efficiency of converting solar thermal power to electricity in CSP power tower plants and (2) reducing the amount of water needed for generation and cooling.

With $8 million in financial support from the Department of Energy's SunShot Initiative and matching funds from collaborating industry partners, the national laboratories are addressing those challenges. NREL is leading the three-year effort with a team that includes Sandia National Laboratories; the University of Wisconsin-Madison; Echogen Power Systems, LLC; Abengoa Solar; the Electric Power Research Institute; and Barber-Nichols Inc.

The project team is designing, building, and testing the turbomachinery and control strategies for a dry-cooled, sCO_2 Brayton cycle that could fundamentally transform the CSP industry.

SNL is the host site for the 10-MW test, and will provide installation support and operators for the testing. Sandia's Nuclear Energy Systems Laboratory (NSEL) is dedicated to developing the Brayton power cycle, and the staff has hands-on experience with sCO_2 test rigs.

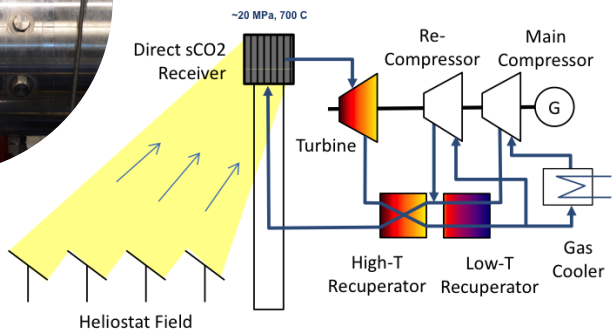

Fossil Energy

As a first step, an operational RCBC can

- supplement existing Rankine cycle plant power generation by capturing waste heat energy without disrupting the original power block;
- replace the steam generating Rankine cycle in coal plants, waste incinerators, and natural gas plants with a 50% improvement in efficiency; and
- be included in a combined-cycle gas turbine power plant, the combined efficiency can exceed 60%, with reduced total capital cost.

Finally, the ultimate RCBC application is carbon capture sequestration. Here, sCO_2 is combined with oxygen and fossil fuel and combusted at very high temperatures in a gas turbine, producing more CO_2 and water. Excess CO_2 is placed in a pipeline and sequestered in a geological repository or used for fossil-fuel production in oil fields. This modified Brayton cycle, termed Allam cycle, would allow coal to produce electricity without atmospheric emissions. This technology will take considerable development in materials and process development.

Sandia National Laboratories is a multi-program laboratory managed and operated by Sandia Corporation, a wholly owned subsidiary of Lockheed Martin Corporation, for the U.S. Department of Energy's National Nuclear Security Administration under contract DE-AC04-94AL85000. SAND2015-4752 M